Pro-face
for the best interface

LT3000 Series

Hardware Manual

Preface

Thank you for purchasing Pro-face's LT3000 Series Graphic Logic Controller Interface (Hereafter referred to as the "LT unit").

Before operating your LT unit, be sure to read this manual to familiarize yourself with the LT unit's operation procedures and features.

NOTICE

1. Copying this manual's contents, either in whole or in part, is prohibited without the express permission of Digital Electronics Corporation, Japan.
2. The information contained in this manual is subject to change without notice.
3. If you should you find any errors or omissions in this document, please contact Digital Electronics Corporation to report your findings.
4. Please be aware that Digital Electronics Corporation shall not be held liable by the user for any damages, losses, or third party claims arising from the uses of this product.

Copyright ©2012.11 Digital Electronics Corporation. All Rights Reserved.

Product names used in this manual are the trademarks / registered trademarks of their respective owners.

Essential Safety Precautions

All safety-related procedures stated in this document must be followed to operate the LT correctly and safely. Be sure to read this and any related documents thoroughly to understand the correct operation and functions of the LT unit.

Safety Icons

Throughout this manual, these icons provide essential safety information for LT operation procedures requiring special attention. These icons indicate the following levels of danger:

⚠ WARNING	Indicates situations where severe bodily injury, death or major equipment damage can occur.
⚠ CAUTION	Indicates situations where slight bodily injury or minor equipment damage can occur.
⃠	Indicates actions or procedures that should NOT be performed.
❗	Indicates actions or procedures that MUST be performed to ensure correct unit operation.

⚠ WARNING

System Design

❗ Be sure to design your LT control system so that, in the event of a main power supply failure or a LT accident, the user system's overall safety integrity will be maintained. If this is not done, incorrect output signals or a LT malfunction may cause an accident.

1) Interlock and other circuits designed to interrupt or oppose normal machine movement (such as Emergency Stop, General Protection, and forward and reverse rotation), as well as those designed to prevent machine damage (such as upper, lower, and traverse movement limit positioning) should all be designed to be located outside of the LT.

2) When the LT generates a "Watchdog Timer Error," during logic program operating, the logic program operation will halt. Also, when Errors occur in Input/Output control areas that the LT cannot detect, unexpected movement may occur in those areas. Therefore, and to prevent unsafe machine movement, a "Failsafe Circuit" should be created which is completely external to the LT.
For a failsafe circuit, refer to *"4.2.5 Installation Precautions" (page 4-13)*.

3) If a problem arises with an external unit's relay or transistor, causing an output (coil) to remain either ON or OFF, a major accident can occur. To prevent this, be sure to set up external watchdog circuits that will monitor vital output signals.

Design a circuit that will supply power to the LT unit's I/O before starting up the LT. If the LT unit's internal program enters RUN mode prior to the I/O unit's load control power turning ON, an incorrect output (signal) or malfunction could cause an accident.

Design a user program that ensures the safety of the user's system, in the event of a LT display or control error, or either a data transmission error or power failure between the LT and a connected unit. These types of problems can lead to an incorrect output (signal) or malfunction, resulting in an accident.

Do not make switches using the switches on the touch panels which may cause operator injury and machine damage. An output may remain either ON or OFF and a major accident can occur. To prevent this, set up circuits such as limiters that will monitor vital output signals. Design switches for important operations to be performed by separate devices. An incorrect output or malfunction can occur and thereby cause an accident.

Do not create LT touch panel switches to control machine safety operations, such as an emergency stop switch. Install these switches as separate hardware switches, otherwise severe bodily injury or equipment damage can occur.

When using the LT with transportation vehicles (trains, cars, and ships), disaster and crime prevention devices, various types of safety equipment, and medical devices that are not life-support related, use redundant and/or failsafe system designs to ensure proper reliability and safety.

Do not use the LT as a warning device for critical alarms that can cause serious operator injury, machine damage or can halt system operation. Critical alarm indicators and their control/activator units must be designed using stand-alone hardware and/or mechanical interlocks.

Do not use the LT with aircraft control devices, aerospace equipment, central trunk data transmission (communication) devices, nuclear power control devices, or medical life support equipment, due to these devices' inherent requirements of extremely high levels of safety and reliability.

When using the LT with transportation vehicles (trains, cars, and ships), disaster and crime prevention devices, various types of safety equipment, and medical devices that are not life-support related, use redundant and/or failsafe system designs to ensure proper reliability and safety.

After the LT unit's backlight burns out the touch panel is still active, unlike the LT unit's "Standby Mode". If the operator fails to notice that the backlight is burned out and touches the panel, a potentially dangerous machine operation error can occur. Therefore, do not create LT unit touch panel switches that may cause injury and/or equipment damage. If your LT unit's backlight suddenly turns OFF, use the following steps to determine if the backlight is actually burned out.

1) If the LT unit's "Backlight Control" is not set and the screen has gone blank, your backlight is burned out.
2) If the LT unit's "Backlight Control" is set to Standby Mode and the screen has gone blank, and touching the screen or performing another input operation does not cause the display to reappear, your backlight is burned out.

Handling

Do not disassemble or modify the LT unit. Doing so may cause a fire or an electric shock.

Do not operate the LT in an environment where flammable gases are present, since it may cause an explosion.

Wiring

To prevent electrical shock or equipment damage, unplug the LT unit's power cord from the power supply prior to installing or wiring the LT.

To prevent an electric shock be sure to disconnect your LT unit's power cord from the power supply before wiring the LT.

Do not use the voltage not specified in the manual. Doing so may cause a fire or an electric shock.

The cables connected to the LT should be secured by cable clamps to prevent weight or tension of the cables added to the connectors or terminals.

The LT unit's wiring should be checked to confirm that both the operating voltage and wiring terminal locations are correct. If either the voltage or the wiring terminal location is incorrect, it can cause a fire or accident.

Maintenance

NEVER touch a live power terminal. Doing so could cause an electrical shock or a machine malfunction.

To prevent an electrical shock, unplug the LT unit's power cord before either cleaning the LT or attaching/detaching the power terminal attachment screws.

Do not connect or disconnect Host and LT unit communication cables while the LT is turned ON.

Do not replace the LT unit's battery yourself. The LT uses a lithium battery for backing up its internal clock data and the battery may explode if it is replaced incorrectly. When replacement is required, please contact your local LT distributor.

⚠ CAUTION

Wiring Layout Precautions

To prevent a LT unit malfunction due to excessive noise, isolate all LT input/output signal lines from all power wiring or power cables via a separate wiring duct.

Installation

Be sure all cable connectors are securely attached to the LT unit. A loose connection may cause incorrect input or output signals.

Wiring

- Be sure to ground the LT unit's FG wire separately from other equipment FG lines. Also, be sure to use a grounding resistance of 100Ω or less and a $2mm^2$ [$0.0062inch^2$] or thicker wire, or your country's applicable standard. Otherwise, electric shock or malfunctions may result.
- Be sure to use only the designated torque to tighten the LT unit's terminal block screws. If these screws are not tightened firmly, it may cause a short-circuit, fire or incorrect unit operation.
- Be sure that metal particles and wiring debris do not fall inside the LT unit. They can cause a fire, malfunction or incorrect unit operation.

Maintenance

- Be sure to read the LT unit's manual carefully before performing program changes, entering forced output, or using the RUN, STOP, or PAUSE commands while the LT is operating. Mistakes made when using these items can cause machine accidents or damage.
- Be sure the electricity is turned OFF before attaching or detaching an I/O unit. If the electricity is ON when an I/O unit is attached or detached, damage or malfunction to the I/O unit may occur.

Unit Disposal

- When the product is disposed of, it should be disposed of in a manner appropriate to, and in accordance with, the user country's industrial machinery disposal/recycling standards.

General Safety Precautions

- Do not press on the LT unit's display with excessive force or with a hard object, since it can damage the display. Also, do not press on the touch panel with a pointed object, such as the tip of a mechanical pencil or a screwdriver, since doing so can damage the touch panel.
- Do not install the LT where the ambient temperature exceeds the specified range. Doing so may cause a unit malfunction.
- To prevent abnormally high temperatures from occurring inside the LT, do not restrict or block the LT unit's rear-face ventilation slots.
- Do not operate the LT in areas where large, sudden temperature changes can occur. These changes can cause condensation to form inside the LT, possibly causing it to malfunction.
- Do not allow water, liquids or metal fragments to enter inside the LT unit's case, since they can cause either a malfunction or an electric shock. The allowable pollution degree is 2.
- Do not operate or store the LT in locations where it can be exposed to direct sunlight, high temperatures, excessive dust, moisture or vibration.
- Do not operate or store the LT where chemicals evaporate, or where chemicals are present in the air.
  Corrosive chemicals: Acids, alkalines, liquids containing salt
  Flammable chemicals: Organic Solvents

Do not use paint thinner or organic solvents to remove dirt or oil from the LT unit's surface. Instead, use a soft cloth moistened with a diluted neutral detergent.

Do not use or store the LT in areas with direct sunlight, since the sun's ultraviolet rays may cause the LCD's quality to deteriorate.

Do not store the LT in an area where the temperature is lower than that recommended in the LT unit's specifications. Doing so may cause the LCD display's liquid to congeal, which can damage the LCD. Also, if the storage area's temperature becomes higher than the specified level, the LCD's liquid may become isotropic, causing irreversible damage to the LCD. Therefore, only store the LT in areas where temperatures are within the LT unit's specifications.

After turning OFF the LT, be sure to wait for 5 seconds before turning it ON again. The LT may not operate correctly if it is restarted too quickly.

Be sure to back up the LT screen data and logic programs in case they are lost accidentally.

LCD Panel Usage Precautions

- The LCD panel's liquid contains an irritant. If the panel is damaged and any of this liquid contacts your skin, immediately rinse the area with running water for at least 15 minutes. If the liquid gets in your eyes, immediately rinse your eyes with running water for at least 15 minutes and consult a doctor.
- The LT unit's LCD screen may flicker or show unevenness in the brightness of certain images or at some contrast settings. This is an LCD characteristics and not a product defect.
- There's an individual difference in brightness and tone of LCD screen. Please be aware of this difference before using the lined-up plural units.
- Depending on the ambient temperature, LCD displays may sometimes look whitish (at high temperatures) or blackish (at low temperatures). This is an LCD characteristic and not a product defect.
- Some of LT unit's LCD screens may contain light or dark pixels. This is an LCD characteristic and not a product defect.
- Extended shadows, or "Crosstalk" may appear on the sides of screen images. This is an LCD characteristic and not a product defect.
- The color displayed on the LT unit's LCD screen may appear different when seen from outside the specified viewing angle. This is an LCD characteristic and not a product defect.
- When the same image is displayed on the LT unit's screen for a long period, an afterimage may appear when the image is changed. This is an LCD characteristic and not a product defect.
- To prevent an afterimage:
  * Set the LT unit's display OFF feature when you plan to display the same screen image for a long period of time.
  * Change the screen image periodically and try to not display the same image for a long period of time.
- Please be aware that characteristics of the LT unit's LCD screen with a white LED backlight may change gradually owing to the deterioration of the backlight LED and the LCD display may look bluish.

Information Symbols

This manual uses the following icons:

IMPORTANT	Indicates a warning or a product limitation. Be sure to follow the instructions given with this icon to ensure the safe operation of the LT.
Screen Editor	Indicates the GP-Pro EX software.
PLC	Abbreviation for Programmable Logic Controller.
Logic program	Indicates a ladder program created with the GP-Pro EX.
*	Indicates useful or important supplemental information.
NOTE	Contains additional or useful information.
SEE→	Indicates pages containing related information.

About the Manuals

For the detailed information on LT3000 Series, refer to the following manuals.

- Maintenance/Troubleshooting
  For the Offline Settings, see Maintenance/Troubleshooting (Offline Settings Guide).
- GP-Pro EX Device/PLC Connection Manual
- GP-Pro EX Reference Manual

IMPORTANT

- LT specifications may change when optional items are used. Check the optional item installation guides' specifications for variances, if any.

The manuals can be downloaded from Pro-face Home Page, "Otasuke Pro!".

"Otasuke Pro!" URL

http://www.pro-face.com/otasuke/

LT3000 Series Model Name Indication

Model name

LT 3 * ** - * 1 - *** - *
A B C D E

A	2	LT-3200 series (3.8-inch): QVGA (320 x 240 dots)
	3	LT-3300 series (5.7-inch): QVGA (320 x 240 dots)
B	00	Standard machine
	01	Low-cost machine
C	A	Monochrome Amber/ Red LCD
	L	Monochrome LCD
	S	STN color LCD
	T	TFT color LCD
D	D24	DC type power supply is used.
E	K	Sink output type
	C	Source output type

LT3000 Series Model Names

The term “LT3000” Series refers to the following LT model numbers:

Series		Model	Product No.
LT3000 series	LT-3200 series	LT-3201A	LT3201-A1-D24-K LT3201-A1-D24-C
	LT-3300 series	LT-3300L	LT3300-L1-D24-K LT3300-L1-D24-C
		LT-3300S	LT3300-S1-D24-K LT3300-S1-D24-C
		LT-3300T	LT3300-T1-D24-K LT3300-T1-D24-C
		LT-3301L	LT3301-L1-D24-K LT3301-L1-D24-C

Global Code

A global code is assigned to every Pro-face product as a universal model number.

For more information on product models and their matching global codes, please refer to the following URL.

http://www.pro-face.com/product/globalcode.html

Package Contents

The following items are included in the LT unit's package. Before using the LT, please check that all items listed here are present.

LT Unit: 1	• Installation Guides (Set of Japanese/Set of English) • Warning/Caution Information (1) • EX Module Hardware Manual (in Japanese/ in English) (1)*1	Installation Gasket: 1 (Attached to the LT unit)	Installation Fasteners: 4 per set
DC Power Connector: 1			
USB Cable Clamp: 1 set Holder: 1, Cover: 1 (LT-3200 series)		(LT-3300 series)	
DIO Connector 1 (LT-3200 series)		(LT-3300 series)	
EX Module*1 Securing Hook (LT-3300 series only) 1			

*1 The EX module can be used as an expansion I/O unit for the LT3000 series or as a remote I/O unit (supported by the CANopen board type unit of the GP3000 series). Read the included manual before using the EX module.

This unit has been carefully packed, with special attention to quality. However, should you find anything damaged or missing, please contact your local LT distributor immediately.

Installation prerequisites for standards

- UL listed products

Industrial Control Equipment	refer to UL508	see [a] in the “Product List“
Suitable for use in Class I, Division 2, Groups A, B, C, and D Hazardous (classified) locations, or Non-Hazardous Locations.	refer to ANSI/ISA-12.12.01	see [b] in the “Product List“

- c-UL listed products

Standard for Process Control Equipment	refer to CSA-C22.2 No.142	see [c] in the “Product List“
Suitable for use in Class I, Division 2, Groups A, B, C, and D Hazardous (classified) locations, or Non-Hazardous Locations.	refer to CSA-C22.2 No.213	see [d] in the “Product List“

- Product List

Product Model No.	Registration Model No.	UL		c-UL	
		[a]	[b]	[c]	[d]
LT3201-A1-D24-K	3481401-01	✓	✓*1	✓	✓*1
LT3201-A1-D24-C	3481401-02	✓	✓*1	✓	✓*1
LT3300−T1−D24−K	3583401-01	✓	✓	✓	✓
LT3300−T1−D24−C	3583401-02	✓	✓	✓	✓
LT3300-S1-D24-K	3583401-01	✓	✓*2	✓	✓*2
LT3300-S1-D24-C	3583401-02	✓	✓*2	✓	✓*2
LT3300-L1-D24-K	3583401-11	✓	✓*2	✓	✓*2
LT3300-L1-D24-C	3583401-12	✓	✓*2	✓	✓*2
LT3301-L1-D24-K	3583401-13	✓	✓*2	✓	✓*2
LT3301-S1-D24-C	3583401-14	✓	✓*2	✓	✓*2

*1 This unit with revision code "B" or later are all compliant this standard.
*2 This unit with revision code "1" or later are all compliant this standard.

UL/c-UL File No.E220851, E210412

For the detailed certification's information, refer to the Pro-face Home page.

<Cautions>

Be aware of the following items when building the LT into an end-use product:

- The LT unit's rear face is not approved as an enclosure. When building the LT unit into an end-use product, be sure to use an enclosure that satisfies standards as the end-use product's overall enclosure.
- The LT unit must be used indoors only.
- Install and operate the LT with its front panel facing outwards.
- If the LT is mounted so as to cool itself naturally, be sure to install it in a vertical panel. Also, it's recommended that the LT should be mounted at least 100 mm away from any other adjacent structures or machine parts. The temperature must be checked on the final product in which the LT is installed.
- For use on a flat surface of a Type 4X (Indoor Use Only) and/or Type 13 Enclosure.

<Hazardous Locations - Compliance and Handling Cautions*1>

(1) Suitable for use in Class I, Division 2, Groups A, B, C, and D Hazardous Locations, or Non-Hazardous Locations.

(2) WARNING: Explosion hazard-substitution of any components may impair compliance to Class I, Division 2.

(3) WARNING: Explosion hazard-when in hazardous locations, turn the power OFF before replacing or wiring modules.

(4) WARNING: Explosion hazard-do not disconnect equipment unless power has been switched off or the area is known to be Non-Hazardous.

(5) In the case of use in Hazardous Locations, be sure to check that the externally connected unit and each interface have been fixed with screws and locked. In Hazardous Locations, it's impossible to insert or pull the cable from the applicable port. Be sure to check that the location is Non-Hazardous before inserting or pulling it.

The safety certificate can be downloaded from Pro-face Home Page.
Home Page URL
http://www.pro-face.com/

*1The compliant Rev. with Hazardous Locations are as follows.
LT-3300T : all Rev.
LT-3300S, LT-3300L, LT-3301L : Rev.1
SEE→ *About Revision (page 12)*

CE Marking

The following units are CE marked products complying with the EMC Directive.

LT3201-A1-D24-K	LT3201-A1-D24-C
LT3300-S1-D24-K	LT3300-S1-D24-C
LT3300-T1-D24-K	LT3300-T1-D24-C
LT3300-L1-D24-K	LT3300-L1-D24-C
LT3301-L1-D24-K	LT3301-L1-D24-C

For the detailed information on CE Marked, be downloaded and refer the Declaration of Conformity from Pro-face Home Page.
Home Page URL
http://www.pro-face.com/

KC Markings

사용자안내문

기 종 별	사 용 자 안 내 문
A급 기기 (업무용 방송통신기자재)	이 기기는 업무용(A급) 전자파적합기기로서 판매자 또는 사용자는 이 점을 주의하시기 바라며, 가정외의 지역에서 사용하는 것을 목적으로 합니다.

About Revision

The nameplate on the LT has the revision number of the LT. In the example below, the asterisk, which is placed at the “A” position, shows that the revision number is “A”.

Contents

Preface 1
Essential Safety Precautions 2
Information Symbols 7
About the Manuals 7
LT3000 Series Model Name Indication 8
LT3000 Series Model Names 8
Global Code 8
Package Contents 9
Installation prerequisites for standards 10
CE Marking 12
KC Markings 12
About Revision 12
Contents 13

Chapter 1 Overview
1.1 System Design 1-2
1.1.1 LT-3200 Series 1-2
1.1.2 LT-3300 Series 1-4
1.2 Accessories 1-6
1.2.1 USB Host Interface 1-6
1.2.2 Serial Interface Item 1-6
1.2.3 Option Items 1-7
1.2.4 Maintenance Items 1-7
1.2.5 EX Module 1-8
1.3 Part Names and Functions 1-10
1.3.1 LT-3200 Series 1-10
1.3.2 LT-3300 Series 1-11

Chapter 2 Specifications
2.1 LT-3200 Series 2-2
2.1.1 General Specifications 2-2
2.1.2 Performance Specifications 2-4
2.1.3 Interface Specifications 2-6
2.1.4 Wiring to the DIO Connector 2-12
2.1.5 Dimensions 2-14
2.2 LT-3300 Series 2-17
2.2.1 General Specifications 2-17

2.2.2 Performance Specifications 2-19
2.2.3 Interface Specifications 2-21
2.2.4 Wiring to the DIO Connector 2-30
2.2.5 Dimensions 2-32

Chapter 3 Sample of the Circuit Diagrams
3.1 Examples of Particular I/O Connections 3-2
3.1.1 Connection to Pulse Motor Amplifier (CW/CCW type) 3-2
3.1.2 Connection to Pulse Motor Amplifier (Clock Up/Down System) 3-4
3.1.3 Connection to a Rotary Encoder 3-6

Chapter 4 Installation and Wiring
4.1 Installation 4-2
4.2 Wiring Precautions 4-7
4.2.1 Connecting the Power Cord 4-7
4.2.2 Connecting the Power Supply 4-10
4.2.3 Grounding 4-11
4.2.4 Wiring Precautions 4-12
4.2.5 Installation Precautions 4-13
4.3 USB Cable Clamp Attachment/Removal 4-16
4.3.1 LT-3200 Series 4-16
4.3.2 LT-3300 Series 4-17

Chapter 5 Maintenance
5.1 Cleaning the Display 5-2
5.2 Periodic Check Points 5-3
5.3 Replacing the Installation Gasket 5-4
5.4 Replacing the Backlight 5-6

1 Overview

1. System Design
2. Accessories
3. Part Names and Functions

This chapter describes peripheral devices that can be connected to LT Series units along with the name and functions of each part.

1.1 System Design

1.1.1 LT-3200 Series

The following diagram illustrates the standard range of items that can be connected to LT-3200 Series units.

◆ LT RUN Mode Peripherals

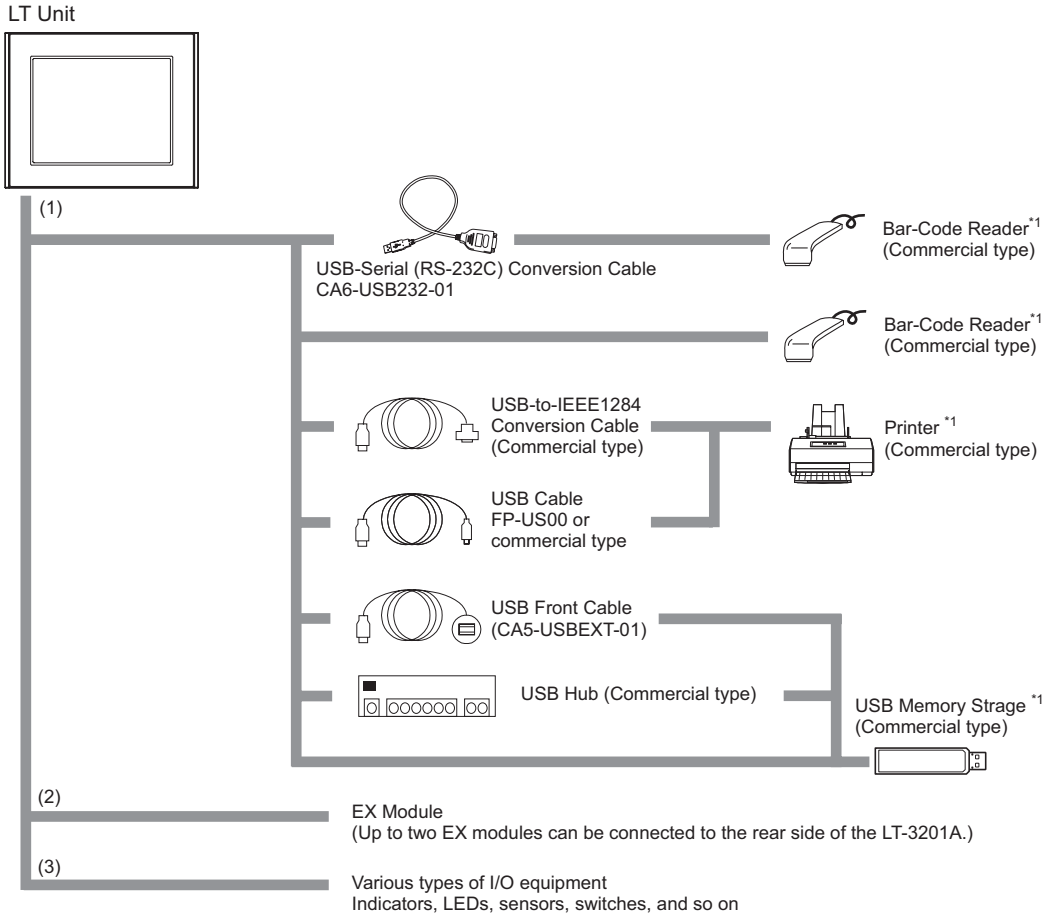

LT Interfaces

(1) USB Host Interface
(2) EX Module Interface
(3) DIO Interface

*1 For supported models, refer to Pro-face's support site "Otasuke Pro!" (http://www.pro-face.com/otasuke/).

You can connect to this site by clicking the GP-Pro EX's [Help (H)] menu – [Connect to Support Site-"Otasuke Pro!" (O)] command.

◆ Edit Mode Peripherals

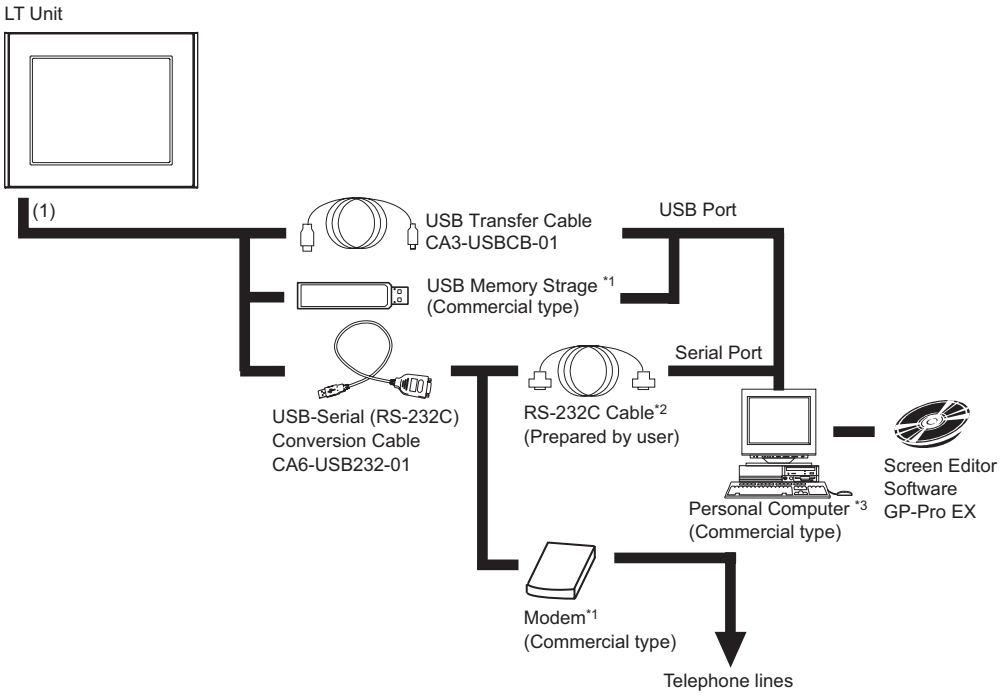

LT Interfaces

(1) USB Host Interface

*1 For supported models, refer to Pro-face's support site "Otasuke Pro!" (http://www.pro-face.com/otasuke/).
You can connect to this site by clicking the GP-Pro EX's [Help (H)] menu – [Connect to Support Site-"Otasuke Pro!" (O)] command.

*2 For details regarding connection methods, be sure to read "Transferring Projects and Data" under "■COM Transfer Connections" in the GP-Pro EX Reference Manual.

*3 Certain types and models of PCs cannot be used

SEE→ *GP-Pro EX Reference Manual*

1.1.2 LT-3300 Series

The following diagram illustrates the standard range of items that can be connected to LT-3300 Series units.

◆ LT RUN Mode Peripherals

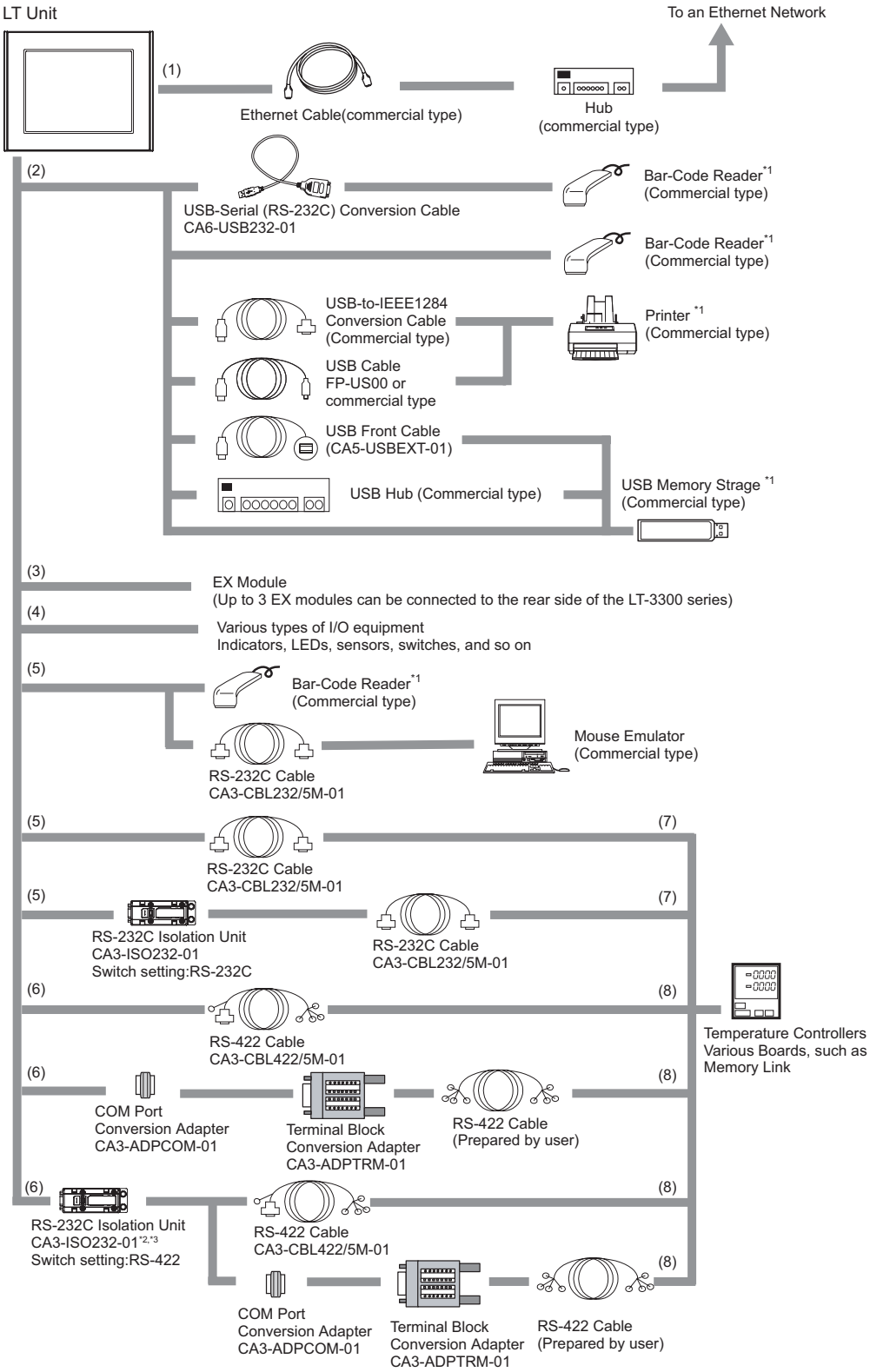

LT Interfaces	Temperature Controller (etc.) Interfaces
(1) Ethernet Interface (10BASE-T/100BASE-TX) Not available with LT-3301L units (2) USB Host Interface (3) EX Module Interface (4) DIO Interface (5) Serial Interface (COM1) (RS-232C mode) (6) Serial Interface (COM1) (RS-422 mode)	(7) RS-232C Port (8) RS-422 Port

*1 For supported models, refer to Pro-face's support site "Otasuke Pro!" (http://www.pro-face.com/otasuke/).
You can connect to this site by clicking the GP-Pro EX's [Help (H)] menu – [Connect to Support Site-"Otasuke Pro!" (O)] command.

*2 The RS-232C Isolation Unit does not correspond to RS-422/485 (2 wire) communication.

*3 The RS-232C Isolation Unit does not correspond to Serial Multilink communication.

◆ Edit Mode Peripherals

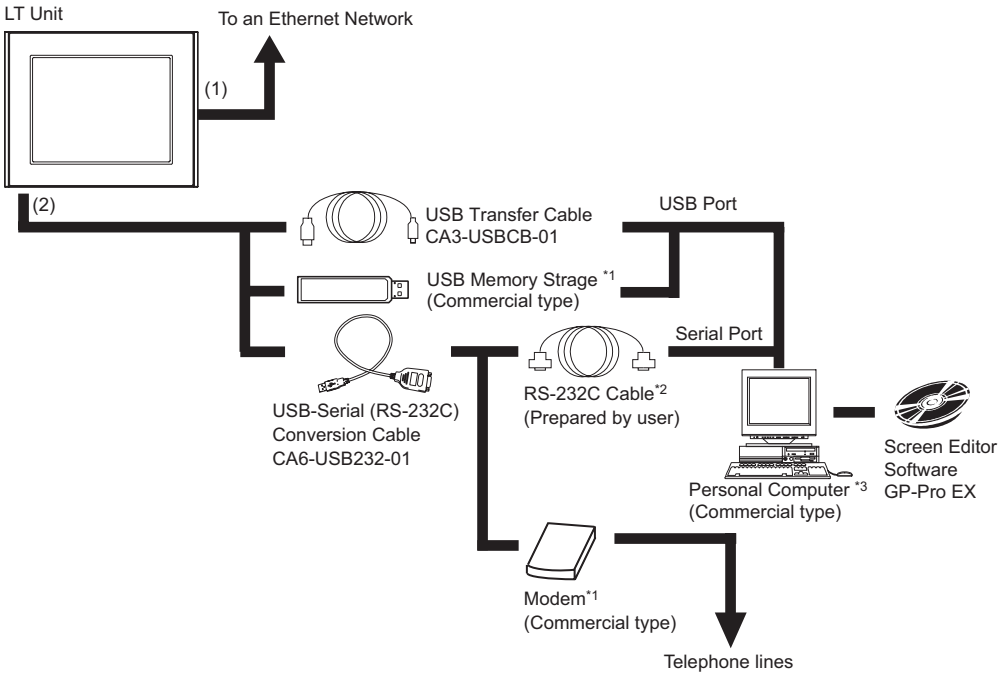

LT Interfaces
(1) Ethernet Interface (10BASE-T/100BASE-TX) Not available with LT-3301L units (2) USB Host Interface

*1 For supported models, refer to Pro-face's support site "Otasuke Pro!" (http://www.pro-face.com/otasuke/).
You can connect to this site by clicking the GP-Pro EX's [Help (H)] menu – [Connect to Support Site-"Otasuke Pro!" (O)] command.

*2 For details regarding connection methods, be sure to read "Transferring Projects and Data" under "■COM Transfer Connections" in the GP-Pro EX Reference Manual.

*3 Certain types and models of PCs cannot be used

SEE→ *GP-Pro EX Reference Manual*

1.2 Accessories

All accessories listed here are produced by Digital Electronics Corporation.

1.2.1 USB Host Interface

Product Name	Model No.	Description
USB Transfer Cable	CA3-USBCB-01 (2m)	Downloads project data created with the Screen Editor via the LT unit's USB I/F.
USB Cable	FP-US00 (5m)	Connects a USB printer. (TYPE-B)
USB Front Cable	CA5-USBEXT-01 (1m)	Extension cable attaching USB port to front panel.
USB-Serial (RS-232C) Conversion Cable	CA6-USB232-01 (0.5m)	Cable for converting a LT unit's USB interface into a serial interface (RS-232C). Allows connection to modems*1 or barcode readers*1 that support RS-232C. Can be used to transfer project data created with the Screen Editor via a serial interface.*2

*1 For supported models, refer to Pro-face's support site "Otasuke Pro!" (http://www.pro-face.com/otasuke/).
You can connect to this site by clicking the GP-Pro EX's [Help (H)] menu - [Connect to Support Site "Otasuke Pro!" (O)] command.

*2 Requires an RS-232C cable (prepared by user) for connection. For details regarding system design, refer to ◆ Edit Mode Peripherals (page-3) if using LT-3200; refer to ◆ Edit Mode Peripherals (page-5) if using LT-3300.
For instructions on how to connect between USB-Serial (RS-232C) Conversion Cable and your PC, always refer to the "GP-Pro EX Reference Manual -> Transferring Projects and Data -> COM Transfer Connections".

1.2.2 Serial Interface Item

Product Name	Model No.	Description
RS-232C Cable	CA3-CBL232/5M-01 (5m)	Interface cable for communication between a temperature controller/various boards and the LT-3300 series via RS-232C.
RS-422 Cable	CA3-CBL422/5M-01 (5m)	Interface cable for communication between a temperature controller/various boards and the LT-3300 series via RS-422. (Socket Type)
RS-422 Cable	CA3-CBL422-01 (5m)	Interface cable for communication between a temperature controller/various boards and the LT-3300 series via RS-422. (Plug Type)
RS232C Isolation Unit	CA3-ISO232-01	Unit for providing isolated connection between a temperature controller/various boards and the LT-3300 series. RS-232C and RS-422 are switchable.
COM Port Conversion Adapter	CA3-ADPCOM-01	Connects optional RS-422 communication items to LT-3300 series unit's COM1 port.
Terminal Block Conversion Adapter	CA3-ADPTRM-01	Connects output from a serial interface with an RS-422 terminal block.

1.2.3 Option Items

Product Name	Model No.	Corresponding LT	Description
Screen Protection Sheet	CA6-DFS4-01	LT-3200 Series	Disposable, dirt-resistant sheet for the LT unit's screen. (5 sheets/set) (Hard type)
	CA3-DFS6-01	LT-3300 Series	
Proective Cover	CA4-DCMDL-01	LT-3300 Series	The installation of the cover is to protect Display from leaking liquid and raise resistant performance against chemical substance (5 sheets)

1.2.4 Maintenance Items

Product Name	Model No.	Corresponding LT	Description
Installation Fastener	CA3-ATFALL-01	LT3000 Series	Used to install the LT into a solid panel.
Installation Gasket	ST400-WP01	LT-3200 Series	Provides dust and moisture resistance when LT is installed into a solid panel.
	CA3-WPG6-01	LT-3300 Series	
DIO Connector	CA6-DIOCN4-01	LT-3200 Series	Connector attached to the DIO interface. Connects an external I/O device. (Set of 5 connectors)
	CA7-DIOCN5-01	LT-3300 Series	
USB Cable Clamp	CA5-USBATL-01	LT-3200 Series	USB Cable clamp to prevent disconnection.
	CA7-USBAT6-01	LT-3300 Series	
DC Power Supply Connector for Medium-sized Units	CA5-DCCNM-01	LT3000 Series	Connector for attaching power supply to medium-sized units.
EX Module Securing Hook	CA7-FIXEXM-01	LT-3300 Series	Hook for securing three EX modules to the LT-3300 Series.
Panel Cutout Adapter	CA4-ATM5-01	LT-3300 Series	Panel cutout adapter for mounting LT-3300 Series in cutout of LT Series.

1.2.5 EX Module (Expanded I/O Unit for LT3000 Series use)

Up to two EX modules can be connected to the rear side of the LT-3200 series.

Up to three EX modules can be connected to the rear side of the LT-3300 series.

NOTE

- As for EXM-DMM24DRF and EXM-ARI8LT, only one EX module can be connected to an LT. For the details, please read “EX Module Hardware Manual” downloaded from Pro-face's support site “Otasuke Pro!” (http://www.pro-face.com/otasuke/).

■Standard Input Module

Product Name	Model No.	Description
EX module (8-point input module)	EXM-DDI8DT	8-point sink/source shared I/O Unit. DC24V input signal can be connected.
EX module (16-point input module)	EXM-DDI16DT	16-point sink/source shared I/O Unit. DC24V input signal can be connected.

■Standard Output Module

Product Name	Model No.	Description
EX module (8-point relay-output module)	EXM-DRA8RT	8-point relay output/2 common type I/O Unit.
EX module (16-point relay-output module)	EXM-DRA16RT	16-point relay output/2 common type I/O Unit.
EX module (8-point sink-output module)	EXM-DDO8UT	8-point transistor output sink I/O Unit.
EX module (8-point source-output module)	EXM-DDO8TT	8-point transistor output source I/O Unit.
EX module (16-point sink-output module)	EXM-DDO16UK	16-point transistor output sink I/O Unit.
EX module (16-point source-output module)	EXM-DDO16TK	16-point transistor output source I/O Unit.

■Standard I/O Module

Product Name	Model No.	Description
EX module (4-point inputs/4-point relay-output module)	EXM-DMM8DRT	4-point input sink-source/4-point relay-output/1 common type I/O Unit.
EX module (16-point inputs/8-point relay-output module)	EXM-DMM24DRF	16-point input sink-source/8-point relay-output/1 common type I/O Unit.

■Analog Input Module

Product Name	Model No.	Description
EX module (2-ch analogue-input module)	EXM-AMI2HT	2-ch analogue Input Unit. (Voltage DC0 to 10V / Current DC4 to 20mA)
EX module (4-ch Analog input / Temperature input module)	EXM-AMI4LT	4-ch temperature Input Unit. (Voltage DC0 to 10V / Current DC4 to 20mA) Pt100/Pt1000/Ni100/Ni1000
EX module (8-ch Pt100/Pt1000 input module)	EXM-ARI8LT	8-ch temperature Input Unit. Pt100/Pt1000

■Analog Output Module

Product Name	Model No.	Description
EX module (1-ch analogue-output module)	EXM-AMO1HT	1-ch analogue Output Unit. (Voltage DC0 to 10V / Current DC4 to 20mA)
EX module (2-ch analogue-output module)	EXM-AVO2HT	2-ch analogue Output Unit. (Voltage DC-10 to +10V)

■Analog I/O Module

Product Name	Model No.	Description
EX module (Thermocouple Pt100 input/1-ch analogue-output module)	EXM-ALM3LT	2-ch temperature Input/1-ch analogue Output Unit. Pt100 Input (Voltage Output DC0 to 10V / Current Output DC4 to 20mA)
EX module (2-ch analogue-input/1-ch analogue-output module)	EXM-AMM3HT	2-ch analogue Input/1-ch analogue Output Unit. (Voltage I/O DC0 to 10V / Current I/O DC4 to 20mA)
EX module (4-ch analogue-input/2-ch analogue-output module)	EXM-AMM6HT	4-ch analogue Input/2-ch analogue Output Unit. (Voltage I/O DC0 to 10V / Current I/O DC4 to 20mA)

1.3 Part Names and Functions

1.3.1 LT-3200 Series

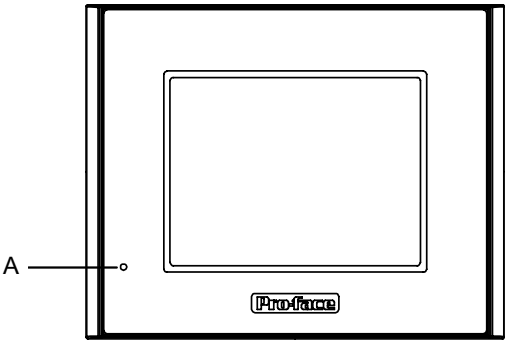

Front

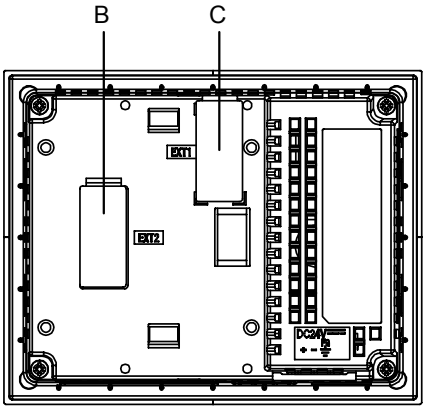

Back

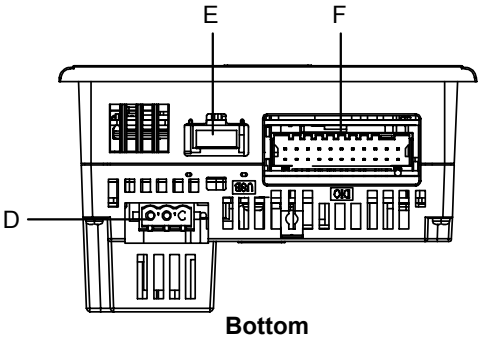

Bottom

A: Status LED
This LED indicates the LT's status, e.g. power input, firmware RUN status or backlight condition. Also, indicates the status of logic program execution.

Color	Indicator	Operation Mode (Drawing)	Logic execution mode (when logic is enabled)
Green	ON	OFFLINE	-
		In operation	RUN
	Flashing	In operation	STOP
Red	ON	When power is turned on.	
	Flashing	In operation	Major Error
Orange	ON	Backlight burnout	
	Flashing	During software startup	

B: AUX Unit Interface/Expansion Unit (EXT2)
Interface where additional units such as communication devices can be connected.

C: EX Module Interface (EXT1)
This is the interface to mount the Pro-face's EX module.

D: Power Plug Connector

E: USB Host Interface (USB)
Conforms to USB1.1. (TYPE-A conn.)
Power Supply Voltage: DC5V ± 5%
Output Current: 500mA (at maximum)
Connects a data transfer cable or USB-compatible printer. The maximum communication distance is 5m.

F: DIO Interface (DIO)
This is the interface to mount external I/O equipment using the DIO connector.

1.3.2 LT-3300 Series

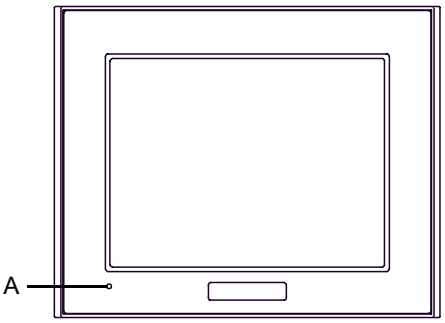

Front

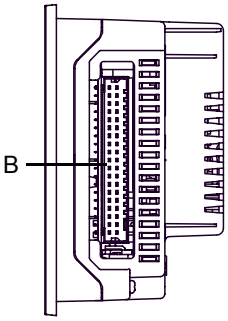

Right side

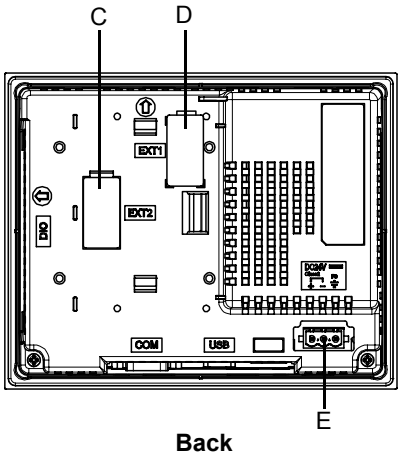

Back

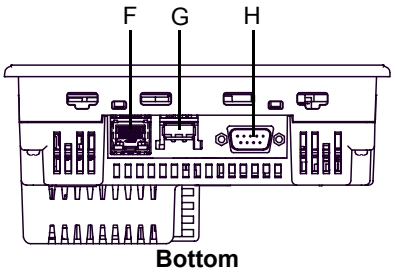

Bottom

A: Status LED
This LED indicates the LT's status, e.g. power input, firmware RUN status or backlight condition. Also, indicates the status of logic program execution.

Color	Indicator	Operation Mode (Drawing)	Logic execution mode (when logic is enabled)
Green	ON	OFFLINE	-
		In operation	RUN
	Flashing	In operation	STOP
Red	ON	When power is turned on.	
	Flashing	In operation	Major Error
Orange	ON	Backlight burnout	
	Flashing	During software startup	

B: DIO Interface (DIO)
This is the interface to mount external I/O equipment using the DIO connector.

C: AUX Unit Interface/Expansion Unit (EXT2)
Interface where additional units such as communication devices can be connected.

D: EX Module Interface (EXT1)
This is the interface to mount the Pro-face's EX module.

E: Power Plug Connector

F: Ethernet Interface (10BASE-T/100BASE-TX)
The Ethernet transmission interface (10BASE-T/100BASE-TX). An RJ-45 type modular jack connector (8-pole) is used. The LED turns on or off to indicate the current status.

LED	Indicates
Green ON	Data transmission available
Green OFF	No connection or subsequent transmission failure
Yellow ON	Data transmission is occurring.
Yellow OFF	No data transmission

G: USB Host Interface (USB)
Conforms to USB1.1. (TYPE-A conn.)
Power Supply Voltage: DC5V ± 5%
Output Current: 500mA (at maximum)
Connects a data transfer cable or USB-compatible printer. The maximum communication distance is 5m.

H: Serial Interface (COM1)
RS232C/RS422/RS485 serial interface. D-sub 9-pin plug type connector. Communication method is switched via software.

2 Specifications

1. LT-3200 Series
2. LT-3300 Series

This chapter describes the general, functional and interface specifications of the LT as well as its part names and dimensions.

2.1 LT-3200 Series

2.1.1 General Specifications

■ Electrical Specifications

Power Supply	Input Voltage	DC24V
	Rated Voltage	DC19.2 to 28.8V
	Allowable Voltage Drop	10ms (max.)
	Power Consumption	18W (max.)
	In-Rush Current	30A (max.)
Voltage Endurance		AC1000V 20mA for 1 minute (between charging and FG terminals)
Insulation Resistance		DC500V 10MΩ (min.) (between charging and FG terminals)

■ Environmental Specifications

Physical	Surrounding Air Temperature	0 to +50°C*1
	Storage Temperature	-20 to +60°C
	Ambient Humidity	10 to 90% RH (Wet bulb temperature: 39°C max. - no condensation.)
	Storage Humidity	10 to 90% RH (Wet bulb temperature: 39°C max. - no condensation.)
	Dust	0.1mg/m^3 and below (non-conductive levels)
	Pollution Degree	For use in Pollution Degree 2 environment
	Atmosphere	Free of corrosive gases
	Air Pressure Vibration Resistance (availment altitude)	800 to 1114hPa (2000 meters above sea-level and below)
Mechanical	Vibration Resistance	IEC61131-2 compliant 5 to 9Hz single-amplitude 3.5mm 9 to 150Hz constant-accelerated velocity 9.8m/s^2 X, Y, Z directions for 10 cycle (100 minute)
	Concussion Resistance	IEC61131-2 compliant (147m/s^2 X, Y, Z directions for 3 time)
Electrical	Noise Immunity	Noise Voltage: 1000V_{P-P} Pulse Duration: 1μs Rise Time: 1ns (via noise simulator)
	Electrostatic Discharge Immunity	6kV (complies with EN 61000-4-2 Level 3)

*1 Extended use in environments where surrounding air temperature is 40°C or higher may degrade the display quality and result in decreased contrast.

■ Structural Specifications

Installation	Grounding	Grounding resistance of 100Ω 2mm^2 or thicker wire, or your country's applicable standard. (Same for FG and SG terminals)
	Structure*1	Rating: Equivalent to IP65f NEMA #250 TYPE 4X/13 (Front surface at panel embedding) Feature size: All-in-one Installation configuration: Panel embedding
	Cooling Method	Natural air circulation
	Weight Approx.	1.0kg [2.2lb] max. (unit only)
	External Dimensions	W130.0mm [5.12in] X H104.0mm [4.09in] X D76.5mm [3.01in]
	Panel Cut Dimensions	W118.5mm [4.67in] X H92.5mm [3.64in]*2 Panel thickness: 1.6mm [0.06in] to 5.0mm [0.20in]

*1 The front face of the LT unit, installed in a solid panel, has been tested using conditions equivalent to the standards shown in the specification. Even though the LT unit's level of resistance is equivalent to these standards, oils that should have no effect on the LT can possibly harm the unit. This can occur in areas where either vaporized oils are present, or where low viscosity cutting oils are allowed to adhere to the unit for long periods of time. If the LT's front face protection sheet becomes peeled off, these conditions can lead to the ingress of oil into the LT and separate protection measures are suggested.

Also, if non-approved oils are present, it may cause deformation or corrosion of the front panel's plastic cover. Therefore, prior to installing the LT be sure to confirm the type of conditions that will be present in the LT's operating environment.

If the installation gasket is used for a long period of time, or if the unit and its gasket are removed from the panel, the original level of the protection cannot be guaranteed. To maintain the original protection level, be sure to replace the installation gasket regularly.

*2 As for dimensional tolerance everything +1/-0mm and R in angle are below R3.

2.1.2 Performance Specifications

■ Performance Specifications

Application*1		FLASH EPROM 6MB
Data Backup		SRAM 128K byte
		Used lithium battery for backup memory
Interface	DIO Interface	The interface to external I/O equipment Input/Output points: 12-point inputs, 6-point outputs Connector: 22 pins
	AUX Interface/ Expansion Unit	Interface for external additional unit only (such as communication equipment) (external)
	USB Host Interface	Conforms to USB1.1. (TYPE-A conn.) x 1 Power Supply Voltage: DC5V ±5% Output Current: 500mA (max.) Communication Distance: 5m (max.)
	EX Module Interface	Interface for Pro-face's EX Modules (Up to two EX modules can be connected)
Clock Accuracy*2		± 65 seconds/ month (at room temperature)
Control Memory	Variable Area	64 KB SRAM (uses lithium battery)
	Program Area	132 KB FLASH EPROM

*1 It is user active capacity.

*2 The LT's internal clock has a slight error. At normal operating temperatures and conditions, with the LT operating from its lithium battery, the degree of error is 65 seconds per month. Variations in operating conditions and battery life can cause this error to vary from -380 to +90 seconds per month. For systems where this degree of error will be a problem, the user should be sure to monitor this error and make adjustments when required.

NOTE

- When the message "RAAA051 Low battery" is displayed, supply power to the display unit and fully charge the battery. The battery charges within 24 hours to a level which allows backup operation. Completing a full charge requires about 96 hours (4 days).
- A Lithium battery's lifetime is: 10 years when the battery's ambient temperature is 40°C or less. 4.1 years when the battery's ambient temperature is 50°C or less. 1.5 years when the battery's ambient temperature is 60°C or less.

  When used for backup:

  Approximately 100 days, with a fully charged battery.

  Approximately 6 days, with a half-charged battery.

■ Display Specifications

Display Type		Monochrome Amber/ Red LCD
Resolution		W320 x H240 pixels
Dot pitch		W0.24mm [0.01in] x H0.24mm [0.01in]
Effective Display Area		W78.8mm [3.10in] x H59.6mm [2.35in]
Color/Shade level		Black and White (8 Shades)
Backlight		Amber/ Red LED (Not user replaceable. When replacement is required, contact your local LT distributor.)
Brightness control		8 levels of adjustment available via touch panel
Contrast Adjustment		8 levels of adjustment available via touch panel
Display Service Life		MTBF value: 50,000hrs. (TYP) (Backlight display service life is not included.)
Backlight Service Life		50,000hrs. or more (at 25°C and continuous operation - period until backlight brightness decreases to 50%)
Language Fonts		Japanese: 6962 (JIS Standards 1 & 2) (including 607 non-kanji characters) ANK: 158 (Korean, Traditional Chinese and Simplified Chinese fonts are downloadable.)
Text composition	Character Sizes	Standard font: 8X8, 8X16, 16X16 and 32X32 dot fonts Stroke font: 6 to 127dot fonts
	Font Sizes	Standard font: Width can be expanded up to 8 times. Height can be expanded up to 8 times*1
Text	8 x 8 dots	40 Char. x 30 rows
	8 x 16 dots	40 Char. x 15 rows
	16 x 16 dots	20 Char. x15 rows
	32 x 32 dots	10 Char. x 7 rows

*1 Font sizes other than those above can be set up by software.

■ Touch Panel Specifications

Type	Resistive Film (analog)
Resolution	1024 x 1024
Service Life	1,000,000 times or more

2.1.3 Interface Specifications

This section describes the specifications of each interface of the LT Series unit.

■ DIO Interface (Connector)

IMPORTANT

- When preparing the cable to connect the wiring, check the pin numbers inscribed on the DIO Connector.

Applicable connector	2-1871940-1 <Tyco Electronics AMP.> CA6-DIOCN4-01<Pro-face>

Pin Arrangement	Pin No.	Signal Name	Pin No.	Signal Name
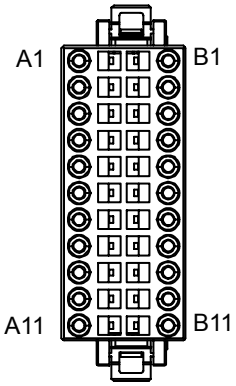 (Cable connection side)	A1	IN1	B1	IN0 (CT0)
	A2	IN3	B2	IN2 (CT1)
	A3	IN5	B3	IN4 (CT2)
	A4	IN7	B4	IN6 (CT3)
	A5	IN9	B5	IN8
	A6	IN11	B6	IN10
	A7	NC	B7	COM
	A8	0V	B8	+24V
	A9	OUT1 (PLS1, PWM1)	B9	OUT0 (PLS0, PWM0)
	A10	OUT3 (PLS3, PWM3)	B10	OUT2 (PLS2, PWM2)
	A11	OUT5	B11	OUT4

NOTE

- Parenthesized signal names ( ) indicate when Pulse output (PLS*), PWM output (PWM*), or Counter Input (CT*) are used.

◆ Input Specifications

Rated Voltage		DC24V
Maximum Allowable Voltage		DC28.8V
Input Method		Sink/Source Input
Rated Current		6.5mA (DC24V) (IN0, IN2, IN4, IN6) 5mA (DC24V) (Other input)
Input Resistance		Approx. 3.7kΩ (IN0, IN2, IN4, IN6) Approx. 4.7kΩ (Other input)
Input Derating		SEE→ ◆ *Input Derating (page2-7)*
Input Points		12
Common Lines		1
Common Design		12 points/1 common line
Operation Range	ON Voltage	DC19V or more
	OFF Voltage	DC5V or less

Input Delay Time*1	OFF to ON	0.5 to 20ms*2
	ON to OFF	0.5 to 20ms*2
Input Signal Display		No LED indicators
Status Display		None
Isolation Method		Photocoupler Isolation
External Connection		22-pin connector (used with Output section)
External Power Supply		For Signal: DC 24V

*1 In the case of IN0, IN2, IN4, and IN6, the input delay time generates a 5μs-delay. For example, in the case of a 0.5ms-cycle sampling:
5μs (ON to OFF) + 0.5ms (sampling cycle) + 5μs (OFF to ON) = 0.51ms
A minimum 0.51ms-restriction is imposed on the input pulse width.
In the case of IN1, IN3, IN5, and from IN7 to IN11, the input delay time generates a 0.5ms-delay. For example, in the case of a 0.5ms-cycle sampling:
0.5ms (ON to OFF) + 0.5ms (sampling cycle) + 0.5ms (OFF to ON) = 1.5ms
A minimum 1.5ms-restriction is imposed on the input-pulse width.

*2 Digital filter can be set at intervals of 0.5 ms.

◆ Input Derating

Using LT input voltage that exceeds the rated voltage, the input ON voltage, the number of input points or the LT's temperature can effect. Also, the LT's input section could overheat, which could lead to an accident or malfunction. Refer to the following drawing and perform Input Derating within the LT unit's rated range.

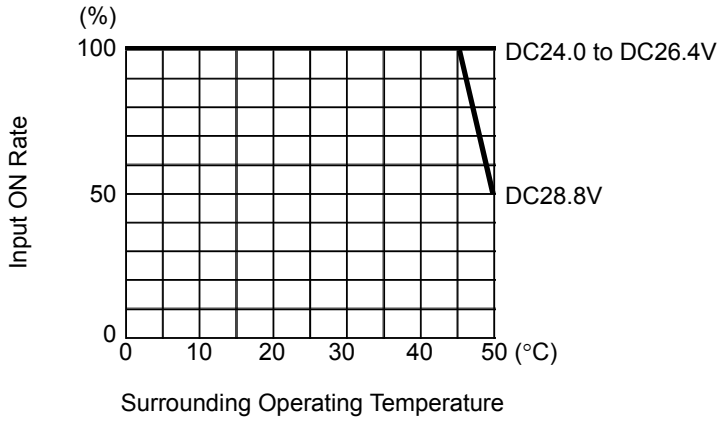

- Input Circuit

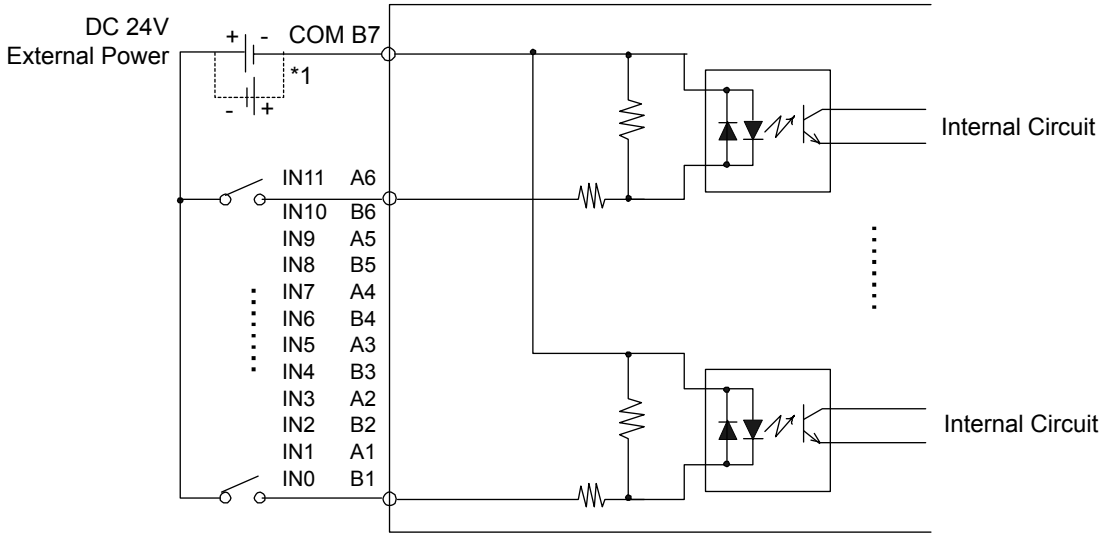

*1 Dotted line shows connection to sink output type.

◆ Output Specifications

Output Terminal		OUT0 to OUT3	OUT4 to OUT5
Rated Voltage		DC24V	
Allowable Voltage Range		DC20.4V to DC28.8V	
Output Method	LT3201-A1-D24-K	Sink Output	
	LT3201-A1-D24-C	Source Output	
Maximum Load Voltage		0.2A/point, 1.2A/common	
Output Voltage Drop		DC 0.5V or less	
Output Delay Time	OFF to ON	5μs or less (With output at DC24V, 200mA)	0.5ms or less (With output at DC24V, 200mA)
	ON to OFF	5μs or less (With output at DC24V, 200mA)	0.5ms or less (With output at DC24V, 200mA)
Voltage Leakage (when OFF)		0.1mA or less	
Clamp Voltage		39V ± 1V	
Type of Output		Transistor Output	
Common Lines		1	
Common Design		6 points/1 common line	
External Connection		22-pin connector (also used for Input)	
Output Protection Type		Output is unprotected	
Internal Fuse		2.5A, 125V Chip fuse (not replaceable)	
Surge Control Circuit		Zener diode	
Output Points		6	
Output Signal Display		No LED indicators	
Status Display Element		None	
Isolation Method		Photocoupler Isolation	
External Power Supply		For Signal: DC 24V	

- LT3201-A1-D24-K Output Circuit (Sink type)

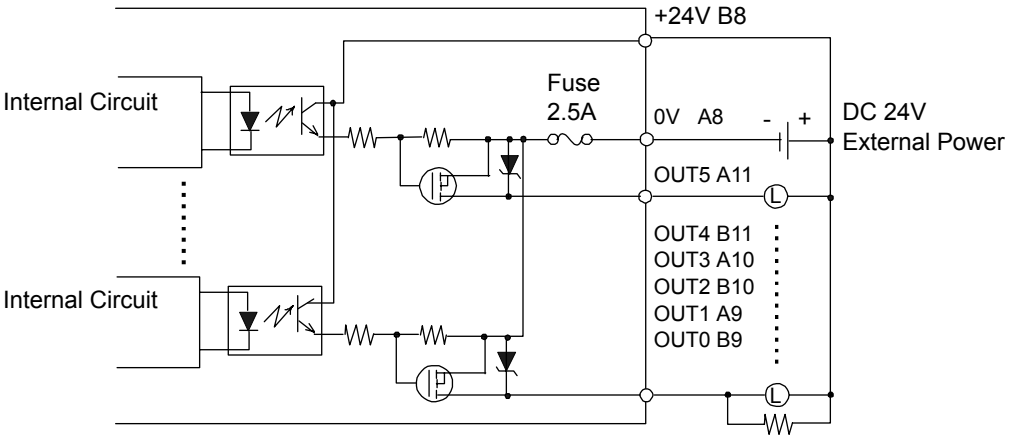

*1 (Example) The output delay time (OFF to ON) is 1.5μs where the output current is DC 24V, 50mA. Install an external dummy resistor to increase the amount of current when more responsiveness is required and the load is light.

NOTE

- Since the output terminals are not electrically protected, an output line might be short-circuited or a connection fault might damage the LT unit. Please install an applicable fuse to prevent an overload in the circuit, if necessary.

- LT3201-A1-D24-C Output Circuit (Source type)

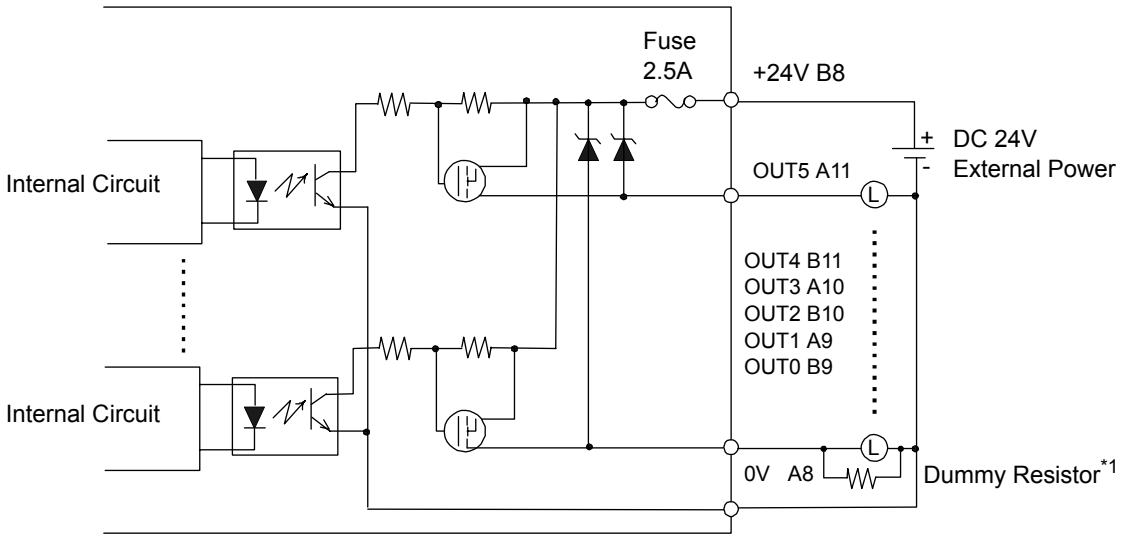

*1 (Example) The output delay time (ON to OFF) is 1.5μs where the output current is DC 24V, 50mA. Install an external dummy resistor to increase the amount of current when more responsiveness is required and the load is light.

NOTE

- Since the output terminals are not electrically protected, an output line might be short-circuited or a connection fault might damage the LT unit. Please install an applicable fuse to prevent an overload in the circuit, if necessary.

◆ High-Speed Counter / Pulse Catch Input Specifications

DIO Standard Input/Output is used as a High-Speed Counter Input. The setup is done by the GP-Pro EX.

SEE→ *GP-Pro EX Reference Manual "Controlling External I/O"*

	Counter		Pulse Catch
Input	DC24V Open Collector		DC24V Open Collector
	Single Phase (4 points)	2 Phase (1 point or 2 points)	
Input Points	CT0 (IN0), CT1 (IN2), CT2 (IN4), CT3 (IN6)	CT0 (IN0), CT1 (IN2) (used as pair) CT0: A Phase, CT1: B Phase CT2 (IN4), CT3 (IN6) (used as pair) CT2: A Phase, CT3: B Phase	IN0, IN2, IN4, IN6
Min. Pulse Width (Pulse Input)	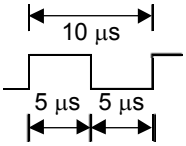		Input signal ON width 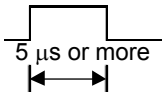
Count Speed (Rise, Fall time)	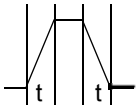 t = 1 μs or less (100kpps)		—
Phase	1 Phase	90 degree phase differential 2-phase signal 1 phase + directional signal	—
High Speed Count Frequency	100Kpps	50Kpps	—
Count Edge Designation	Available	Not Available	—
Count Register	32 Bit UP/DOWN Counter		—
Counter Mode Change	Set through software		—
Upper/Lower Limit Setting	Not Available		—
Preload - Prestrobe	Available		—
Marker Input (Counter Value Clear)	None	IN3, IN7	—

◆ Pulse/PWM Output Specifications

DIO Standard Input/Output is used as a Pulse Output or PWM Output. The setup is done by the GP-Pro EX.

SEE→ *GP-Pro EX Reference Manual "Controlling External I/O"*

	Pulse Output	PWM Output
Output Points	4 Points	
Output Method	PLS0 to PLS3 (OUT0 to OUT3) defined by user	PWM0 to PWM3 (OUT0 to OUT3) defined by user
Load Voltage	DC24V	
Min. Load Current	1mA	
Max. Output Frequency	Up to 65kHz possible per point (set through software)	
Pulse Acceleration/ Deceleration Speed	Available	—
ON Duty	50%±10% (at 65kHz)*1	19 to 81% (at 65kHz)*2

*1 The ON Duty error (10%) will be reduced if the Output frequency is low.

*2 The ON Duty (effective range) will be widened if the Output frequency is low.

2.1.4 Wiring to the DIO Connector

⚠ WARNING

Be sure to remove the DIO Connector from the LT unit prior to starting wiring. Failure to do so may cause an electric shock.

◆ Items Required to Wire Connectors

- Screwdriver

  Recommended type: 1891348-1 <Tyco Electronics AMP.>

  If another manufacturer is used, be sure the part has the following dimensions:

  point depth: 1.5mm [0.06in.]

  point width: 2.4mm [0.09in.]

  Point shape should be DIN5264A, and meet Security Standard DN EN60900.

  Also, the screwdriver's tip should be flat as indicated in order to access the narrow hole of the connector:

Screwdriver Tip Shape

◆ DIO Cable Specifications

DIO Cable Diameter	AWG24 to 18 UL1015 or UL1007
Conductor Type	Stranded Wire*1
Conductor Length	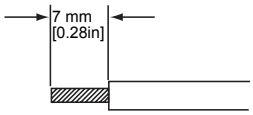

*1 If the Conductor's end (individual) wires are not twisted correctly, the end wires may either short against each other, or against an electrode.

The connectors are a spring clamp type.

◆ Connecting the DIO Cable

1. Insert a flathead screwdriver, at an angle, into the tool insertion hole (square-shaped hole) of the connector.

2. When inserting the flathead screw driver, be sure that it is perpendicular to the center division wall.

NOTE

- Make the insertion distance of the flathead screwdriver approximately 4 mm. Inserting forcefully may break the inside of the connector and will a cause of contact defect. Also, do not turn the flathead screwdriver while the tip is inside of the tool insertion hole (square-shaped hole).

3. The adjacent wire insertion hole (round-shaped hole) will be in an open state.
   With the flathead screwdriver still inserted, insert the wire into the wire insertion hole (round-shaped hole).

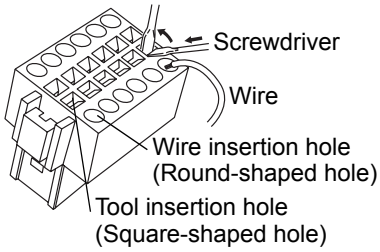

4. Remove the flathead screwdriver from the tool insertion hole (square-shaped hole). The wire insertion hole (round-shaped hole) will close and the wire will be secured. In the case of wire removal, remove the desired wire by inserting a flathead screwdriver into the corresponding tool insertion hole (square-shaped hole) following procedures (1) and (2).

5. Insert the wired DIO connector straight into the DIO I/F of the LT unit.

IMPORTANT

- Be sure to strip only the amount of cover required. If too much cover is removed, the end wires may short against each other, or against an electrode, which can create an electric shock. If not enough cover is removed the wire cannot carry a charge.
- Do not solder the wire itself. This could lead to a bad or poor contact.
- Insert each wire completely into its opening. Failure to do so can lead to a unit malfunction or short, either against wire filaments, or against an electrode.
- When wiring, be aware of the installation position, direction, and twisting of the wiring as to not develop stress on the connector. Fix the cable near the LT by cable clamp and set it loosely as to not place tension on the connector.

2.1.5 Dimensions

The following dimensions apply to LT-3201A unit.

■ Installation Fasteners Attached Dimensions

Unit: mm[in.]

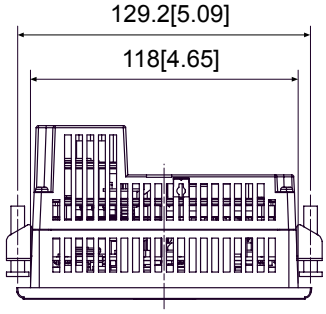

Top

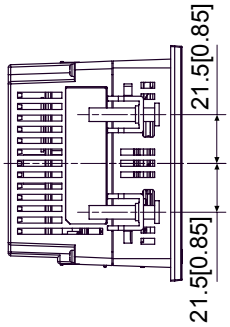

Left Side

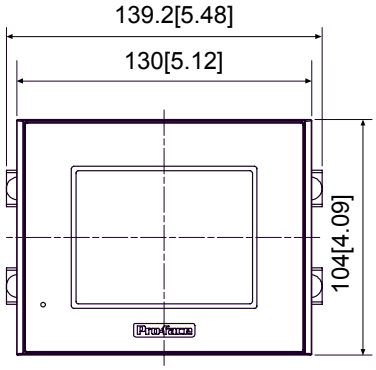

Front

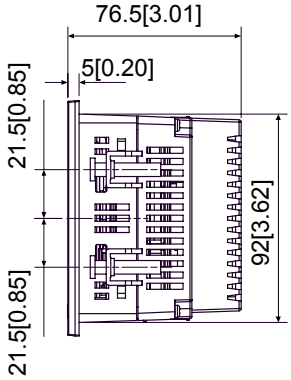

Right Side

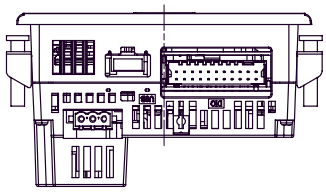

Bottom

■ Cable Attached Dimensions

Unit: mm[in.]

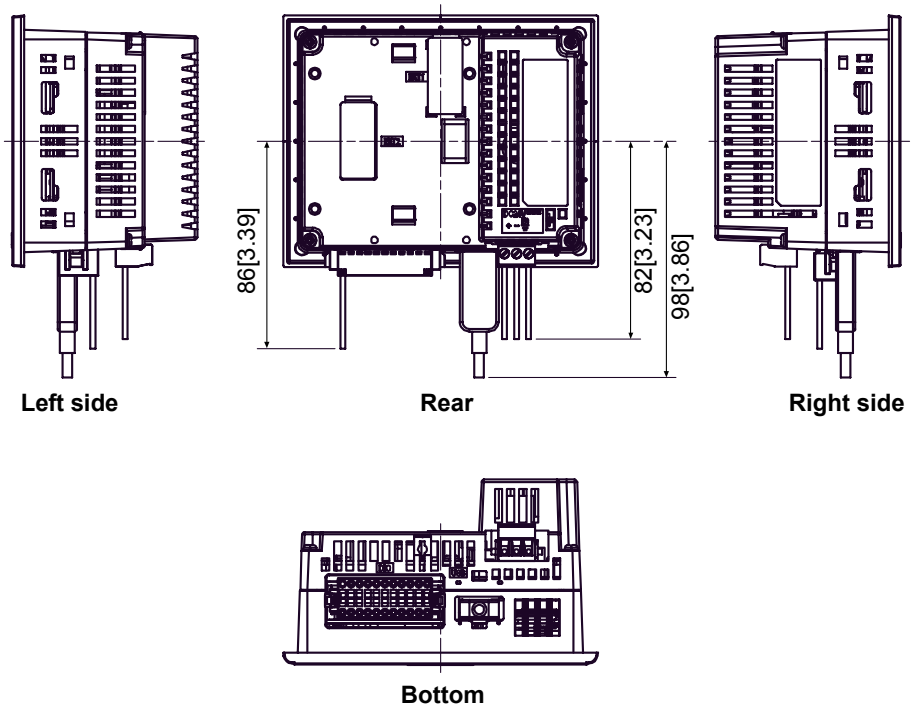

IMPORTANT

- All the above values are designed in case of cable bending.
  The dimensions given here are representative values depending on the type of connection cable used. Therefore, they are all intended for reference only.

■ Panel Cut Dimensions

Unit: mm[in.]

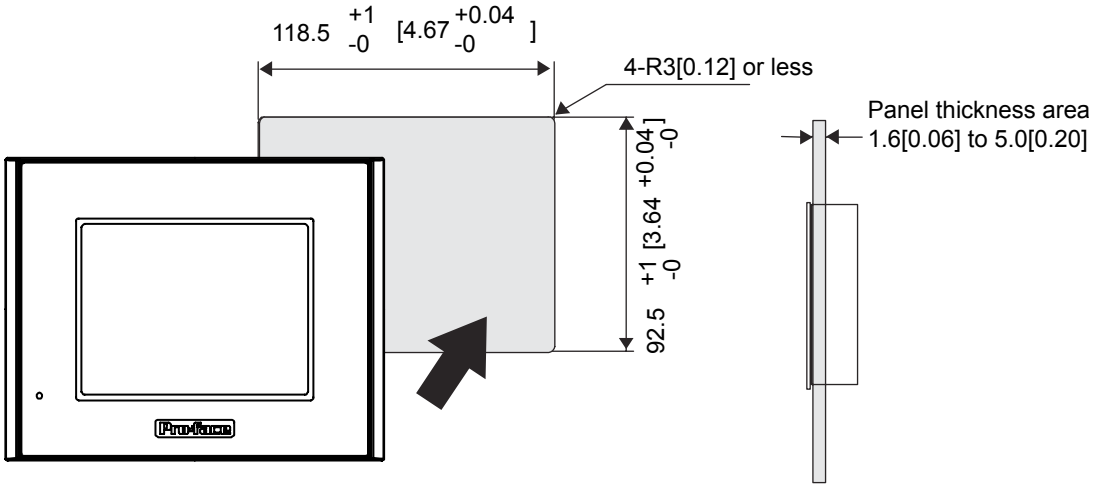

■ Installation Fasteners

Unit: mm[in.]

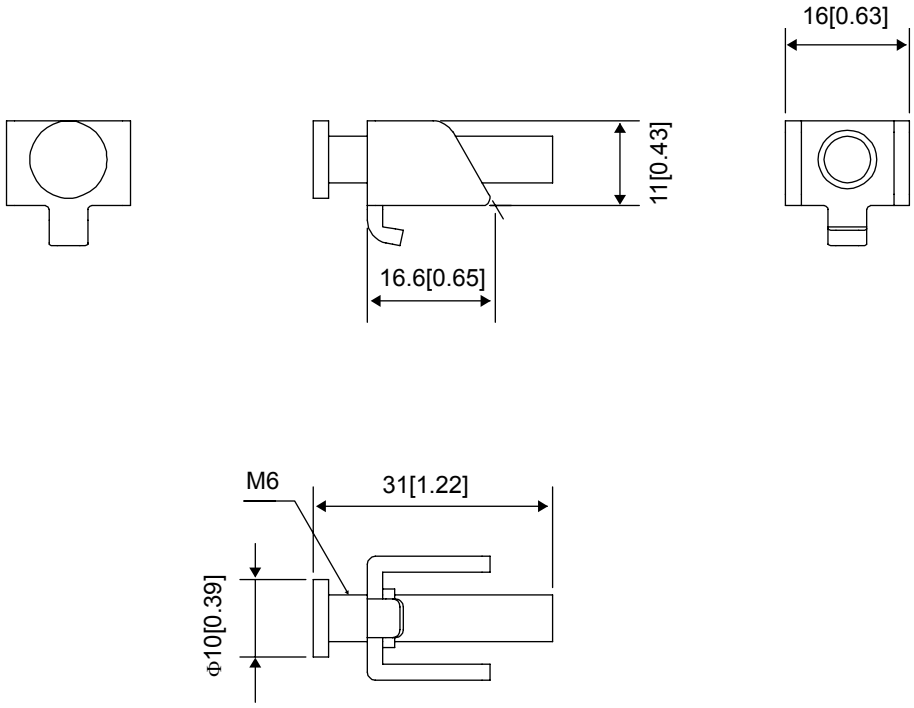

2.2 LT-3300 Series

2.2.1 General Specifications

■ Electrical Specifications

Power Supply	Input Voltage	DC24V
	Rated Voltage	DC19.2 to 28.8V
	Allowable Voltage Drop	3ms (max.)
	Power Consumption	27W (max.)
	In-Rush Current	30A (max.)
Voltage Endurance		AC1000V 20mA for 1 minute (between charging and FG terminals)
Insulation Resistance		DC500V 10MΩ (min.) (between charging and FG terminals)

■ Environmental Specifications

Physical	Surrounding Air Temperature	0 to +50°C*1
	Storage Temperature	-20 to +60°C
	Ambient Humidity	10 to 90% RH (Wet bulb temperature: 39°C max. - no condensation.)
	Storage Humidity	10 to 90% RH (Wet bulb temperature: 39°C max. - no condensation.)
	Dust	0.1mg/m^3 and below (non-conductive levels)
	Pollution Degree	For use in Pollution Degree 2 environment
	Atmosphere	Free of corrosive gases
	Air Pressure Vibration Resistance (availment altitude)	800 to 1114hPa (2000 meters above sea-level and below)
Mechanical	Vibration Resistance	IEC61131-2 compliant 5 to 9Hz single-amplitude 3.5mm 9 to 150Hz constant-accelerated velocity 9.8m/s^2 X, Y, Z directions for 10 cycle (100 minute)
	Concussion Resistance	IEC61131-2 compliant (147m/s^2 X, Y, Z directions for 3 time)
Electrical	Noise Immunity	Noise Voltage: 1000V_{P-P} Pulse Duration: 1μs Rise Time: 1ns (via noise simulator)
	Electrostatic Discharge Immunity	6kV (complies with EN 61000-4-2 Level 3)

*1 Extended use in environments where surrounding air temperature is 40°C or higher may degrade the display quality and result in decreased contrast.

■ Structural Specifications

Installation	Grounding	Grounding resistance of 100Ω 2mm^2 or thicker wire, or your country's applicable standard. (Same for FG and SG terminals)
	Structure*1	Rating: Equivalent to IP65f NEMA #250 TYPE 4X/13 (Front surface at panel embedding) Feature size: All-in-one Installation configuration: Panel embedding
	Cooling Method	Natural air circulation
	Weight Approx.	1.0kg [2.2lb] max. (unit only)
	External Dimensions	W167.5mm [6.59in] X H135.0mm [5.31in] X D78.0mm [3.07in]
	Panel Cut Dimensions	W156.0mm [6.14in] X H123.5mm [4.86in]*2 Panel thickness: 1.6 [0.06in] to 5.0mm [0.20in]

*1 The front face of the LT unit, installed in a solid panel, has been tested using conditions equivalent to the standards shown in the specification. Even though the LT unit's level of resistance is equivalent to these standards, oils that should have no effect on the LT can possibly harm the unit. This can occur in areas where either vaporized oils are present, or where low viscosity cutting oils are allowed to adhere to the unit for long periods of time. If the LT's front face protection sheet becomes peeled off, these conditions can lead to the ingress of oil into the LT and separate protection measures are suggested.

Also, if non-approved oils are present, it may cause deformation or corrosion of the front panel's plastic cover. Therefore, prior to installing the LT be sure to confirm the type of conditions that will be present in the LT's operating environment.

If the installation gasket is used for a long period of time, or if the unit and its gasket are removed from the panel, the original level of the protection cannot be guaranteed. To maintain the original protection level, be sure to replace the installation gasket regularly.

*2 As for dimensional tolerance everything +1/-0mm and R in angle are below R3.

2.2.2 Performance Specifications

■ Performance Specifications

Model		LT-3300L/LT-3300S/LT-3300T	LT-3301L
Application*1		FLASH EPROM 6MB	
Data Backup		SRAM 128K byte	
		Used lithium battery for backup memory	
Interface	Serial Interface	COM1: RS232C/RS422/RS485 Asynchronous Transmission: Data Length: 7 bit/8 bit Parity: none, Odd or Even Stop Bit: 1bit/2bit Data transmission Speed: 2400bps to 115.2Kbps Connector: DSUB-9pin plug	
	Ethernet Interface	Ethernet (IEEE802.3u,10BASE-T/100BASE-TX) Connector: modular jack connector (RJ-45)	–
	DIO Interface	The interface to external I/O equipment Input/Output points: 16-point inputs, 16-point outputs Connector: 38 pins	
	AUX Interface/ Expansion Unit	Interface for external additional unit only (such as communication equipment) (external)	
	USB Host Interface	Conforms to USB1.1. (TYPE-A conn.) x 1 Power Supply Voltage: DC5V ±5% Output Current: 500mA (max.) Communication Distance: 5m (max.)	
	EX Module Interface	Interface for Pro-face's EX Modules (Up to three EX modules can be connected)	
Clock Accuracy*2		± 65 seconds/ month (at room temperature)	
Control Memory	Variable Area	64 KB SRAM (uses lithium battery)	
	Program Area	132 KB FLASH EPROM	

*1 It is user active capacity.

*2 The LT's internal clock has a slight error. At normal operating temperatures and conditions, with the LT operating from its lithium battery, the degree of error is 65 seconds per month. Variations in operating conditions and battery life can cause this error to vary from -380 to +90 seconds per month. For systems where this degree of error will be a problem, the user should be sure to monitor this error and make adjustments when required.

NOTE

- When the message "RAAA051 Low battery" is displayed, supply power to the display unit and fully charge the battery. The battery charges within 24 hours to a level which allows backup operation. Completing a full charge requires about 96 hours (4 days).
- A Lithium battery's lifetime is: 10 years when the battery's ambient temperature is 40°C or less. 4.1 years when the battery's ambient temperature is 50°C or less. 1.5 years when the battery's ambient temperature is 60°C or less.
  When used for backup:
  Approximately 100 days, with a fully charged battery.
  Approximately 6 days, with a half-charged battery.
- When connecting the external device directly to the LT unit with an Ethernet cable, depending on the external device, communication may not be possible.
  Please connect over a network hub.

■ Display Specifications

Model		LT-3300L LT-3301L	LT-3300S	LT-3300T
Display Type		Monochrome LCD	STN Color LCD	TFT Color LCD
Resolution		W320 x H240 pixels		
Dot pitch		W0.36mm [0.01in] x H0.36mm [0.01in]		
Effective Display Area		W115.2mm [4.54in] x H86.4mm [3.40in]		
Color/Shade level		Black and White (16 Shades) (3-Speed Blink)	4096 Colors (3-Speed Blink)	65,536 Colors (No 3-Speed Blink)/ 16,384 Colors (3-Speed Blink)
Backlight		White LED (Not user replaceable. When replacement is required, contact your local LT distributor.)		
Brightness control		8 levels of adjustment available via touch panel		
Contrast Adjustment		8 levels of adjustment available via touch panel		-
Display Service Life		MTBF value: 50,000hrs. (TYP) (Backlight display service life is not included.)		
Backlight Service Life		50,000hrs. or more (at 25°C and continuous operation - period until backlight brightness decreases to 50%)		
Language Fonts		Japanese: 6962 (JIS Standards 1 & 2) (including 607 non-kanji characters) ANK: 158 (Korean, Traditional Chinese and Simplified Chinese fonts are downloadable.)		
Text composition	Character Sizes	Standard font: 8X8, 8X16, 16X16 and 32X32 dot fonts Stroke font: 6 to 127dot fonts		
	Font Sizes	Standard font: Width can be expanded up to 8 times. Height can be expanded up to 8 times*1		
Text	8 x 8 dots	40 Char. x 30 rows		
	8 x 16 dots	40 Char. x 15 rows		
	16 x 16 dots	20 Char. x15 rows		
	32 x 32 dots	10 Char. x 7 rows		

*1 Font sizes other than those above can be set up by software.

■ Touch Panel Specifications

Type	Resistive Film (analog)
Resolution	1024 x 1024
Service Life	1,000,000 times or more

2.2.3 Interface Specifications

This section describes the specifications of each interface of the LT Series unit.

IMPORTANT

- The LT unit's serial Interface is not isolated. When the host (PLC) unit is also not isolated, be sure to connect the #5 SG (Signal Ground) terminal to reduce the risk of damaging the RS232C/RS422/RS485 circuit.
- In the LT unit, SG (signal ground) and FG (frame ground) are connected internally. When connecting an external device to the LT using the SG terminal, be sure to check that no short-circuit loop is created when you setup the system.

NOTE

- When isolation is necessary, you can use the RS232C isolation unit (CA3-ISO232-01) on COM1.

■Serial Interfaces (COM1)

This interface is used to connect an RS232C/RS422/RS485 *1 cable. D-sub 9-pin plug connector is used.

<LT unit side>

LT Connector	XM2C-0942-502LX <OMRON Co.>
Interfit Bracket	#4-40 (UNC)

<Cable side>

Recommended Cable Connector	XM2D-0901 <OMRON Co.>
Recommended Cable Cover	XM2S-0913 <OMRON Co.>
Recommended Jack Screw (#4-40 UNC)	XM2Z-0073 <OMRON Co.>

In the case of RS232C

Pin Arrangement	Pin No.	RS232C		
		Signal Name	Direction	Meaning
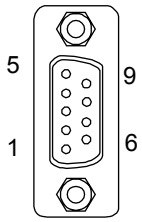 (LT unit side)	1	CD	Input	Carrier Detect
	2	RD(RXD)	Input	Receive Data
	3	SD(TXD)	Output	Send Data
	4	ER(DTR)	Output	Data Terminal Ready
	5	SG	-	Signal Ground
	6	DR(DSR)	Input	Data Set Ready
	7	RS(RTS)	Output	Request to Send
	8	CS(CTS)	Input	Send Possible
	9	CI(RI)/VCC	Input/-	Called status display +5V±5% Output 0.25A *2
	Shell	FG	-	Frame Ground (Common with SG)

In the case of RS422C/RS485

Pin Arrangement	Pin No.	RS422/RS485		
		Signal Name	Direction	Meaning
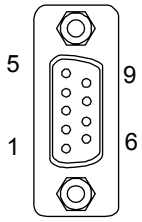 (LT unit side)	1	RDA	Input	Receive Data A(+)
	2	RDB	Input	Receive Data B(-)
	3	SDA	Output	Send Data A(+)
	4	ERA	Output	Data Terminal Ready A(+)
	5	SG	-	Signal Ground
	6	CSB	Input	Send Possible B(-)
	7	SDB	Output	Send Data B(-)
	8	CSA	Input	Send Possible A(+)
	9	ERB	Output	Data Terminal Ready B(-)
	Shell	FG	-	Frame Ground (Common with SG)

*1 Communication method is switched via software.

*2 The RI/VCC selection for Pin #9 is switched via software. The VCC output is not protected against overcurrent. To prevent damage or a unit malfunction, use only the rated current.

■ DIO Interface (Connector)

IMPORTANT

- When preparing the cable to connect the wiring, check the pin numbers inscribed on the DIO Connector.

Applicable connector	2-1871940-9 <Tyco Electronics AMP.> CA7-DIOCN5-01<Pro-face>

Pin Arrangement	Pin No.	Signal Name	Pin No.	Signal Name
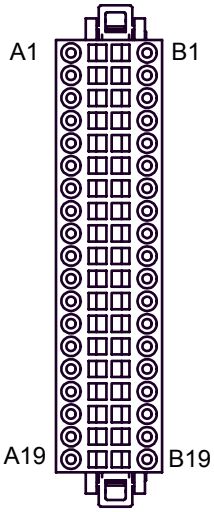 (Cable connection side)	A1	IN1	B1	IN0 (CT0)
	A2	IN3	B2	IN2 (CT1)
	A3	IN5	B3	IN4 (CT2)
	A4	IN7	B4	IN6 (CT3)
	A5	IN9	B5	IN8
	A6	IN11	B6	IN10
	A7	IN13	B7	IN12
	A8	IN15	B8	IN14
	A9	NC	B9	COM
	A10	Sink: NC Source: +24V	B10	Sink: +24V Source: +24V
	A11	Sink: 0V Source: NC	B11	Sink: 0V Source: 0V
	A12	OUT1 (PLS1, PWM1)	B12	OUT0 (PLS0, PWM0)
	A13	OUT3 (PLS3, PWM3)	B13	OUT2 (PLS2, PWM2)
	A14	OUT5	B14	OUT4
	A15	OUT7	B15	OUT6
	A16	OUT9	B16	OUT8
	A17	OUT11	B17	OUT10
	A18	OUT13	B18	OUT12
	A19	OUT15	B19	OUT14

NOTE

- Parenthesized signal names ( ) indicate when Pulse output (PLS*), PWM output (PWM*), or Counter Input (CT*) are used.

◆ Input Specifications

Rated Voltage	DC24V
Maximum Allowable Voltage	DC28.8V
Input Method	Sink/Source Input
Rated Current	6.5mA (DC24V) (IN0, IN2, IN4, IN6) 4.1mA (DC24V) (Other input)
Input Resistance	Approx. 3.7kΩ (IN0, IN2, IN4, IN6) Approx. 5.9kΩ (Other input)
Input Derating	SEE→ ◆ *Input Derating (page2-24)*

Input Points		16
Common Lines		1
Common Design		16 points/1 common line
Operation Range	ON Voltage	DC19V or more
	OFF Voltage	DC5V or less
Input Delay Time*1	OFF to ON	0.5 to 20ms*2
	ON to OFF	0.5 to 20ms*2
Input Signal Display		No LED indicators
Status Display		None
Isolation Method		Photocoupler Isolation
External Connection		38-pin connector (used with Output section)
External Power Supply		For Signal: DC 24V

*1 In the case of IN0, IN2, IN4, and IN6, the input delay time generates a 5μs-delay. For example, in the case of a 0.5ms-cycle sampling:
5μs (ON to OFF) + 0.5ms (sampling cycle) + 5μs (OFF to ON) = 0.51ms
A minimum 0.51ms-restriction is imposed on the input pulse width.
In the case of IN1, IN3, IN5, and from IN7 to IN15, the input delay time generates a 0.5ms-delay. For example, in the case of a 0.5ms-cycle sampling:
0.5ms (ON to OFF) + 0.5ms (sampling cycle) + 0.5ms (OFF to ON) = 1.5ms
A minimum 1.5ms-restriction is imposed on the input-pulse width.

*2 Digital filter can be set at intervals of 0.5 ms.

◆ Input Derating

Using LT input voltage that exceeds the rated voltage, the input ON voltage, the number of input points or the LT's temperature can effect. Also, the LT's input section could overheat, which could lead to an accident or malfunction. Refer to the following drawing and perform Input Derating within the LT unit's rated range.

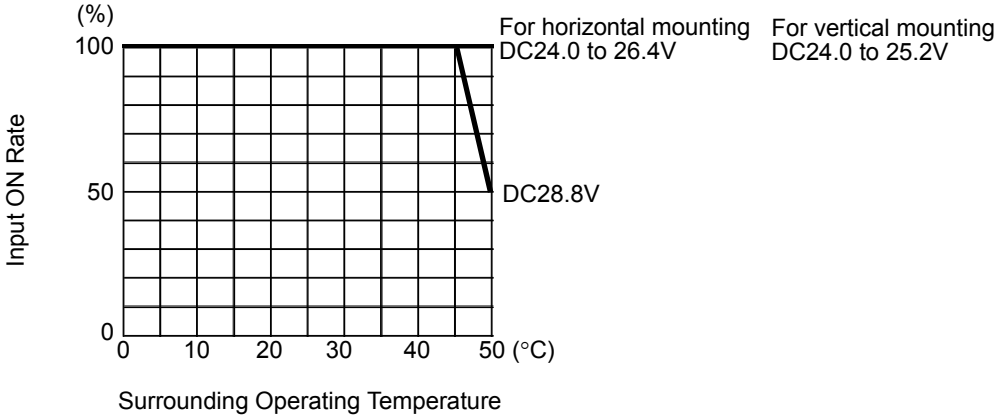

- Input Circuit

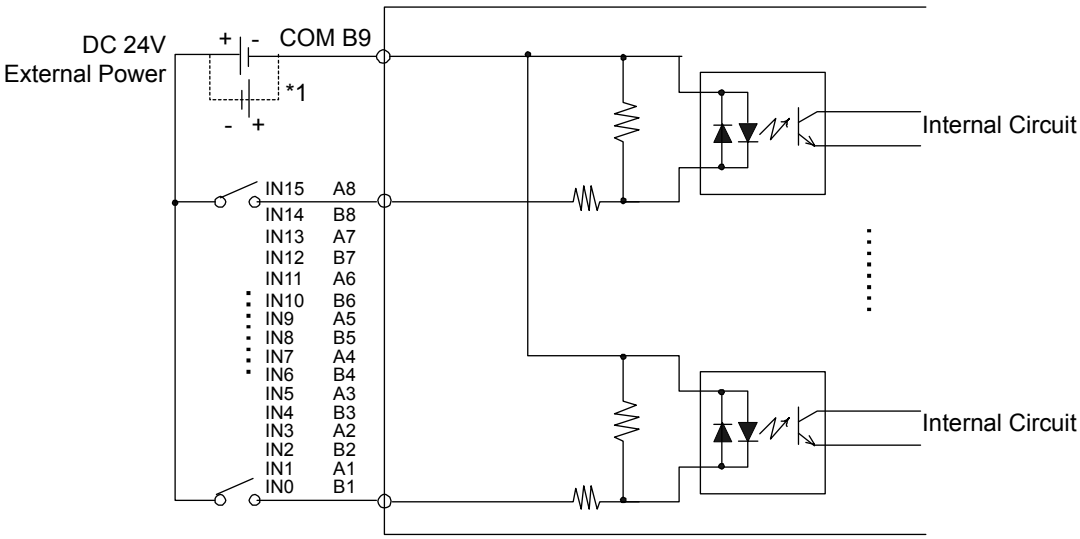

*1 Dotted line shows connection to sink output type.

◆ Output Specifications

Output Terminal		OUT0 to OUT3	OUT4 to OUT15
Rated Voltage		DC24V	
Allowable Voltage Range		DC20.4V to DC28.8V	
Output Method	LT330*-*1-D24-K	Sink Output	
	LT330*-*1-D24-C	Source Output	
Maximum Load Current		0.2A/point, 1.6A/common	
Minimum Load Current		1mA	1mA (Pulse/PWM output unavailable)
Output Voltage Drop		DC 0.5V or less	
Output Delay Time	OFF to ON	5μs or less (With output at DC24V, 200mA)	0.5ms or less (With output at DC24V, 200mA)
	ON to OFF	5μs or less (With output at DC24V, 200mA)	0.5ms or less (With output at DC24V, 200mA)
Voltage Leakage (when OFF)		0.1mA or less	
Clamp Voltage		39V ± 1V	
Type of Output		Transistor Output	
Common Lines		2	
Common Design		8 points/1 common line x 2	
External Connection		38-pin connector (also used for Input)	
Output Protection Type		Output is unprotected	
Internal Fuse		3.5A, 125V Chip fuse x 2 (not replaceable)	
Surge Control Circuit		Zener diode	
Output Points		16	
Output Signal Display		No LED indicators	
Status Display Element		None	
Isolation Method		Photocoupler Isolation	
External Power Supply		For Signal: DC 24V	

- LT330*-*1-D24-K Output Circuit (Sink type)

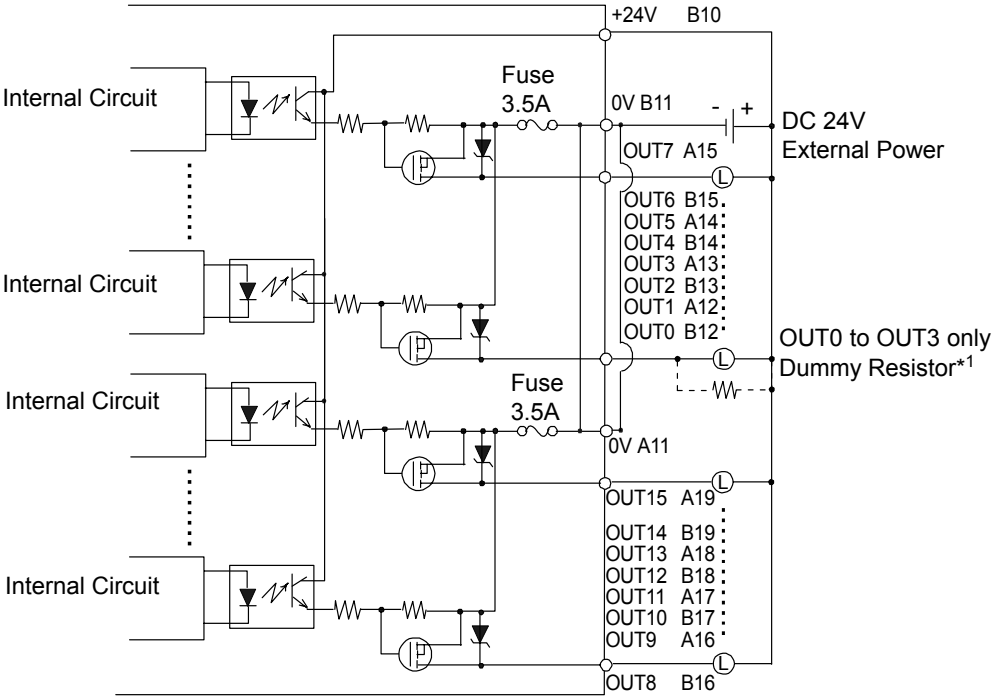

*1 OUT0 to OUT3 only.

(Example) The output delay time (OFF to ON) is 1.5μs where the output current is DC 24V, 50mA. Install an external dummy resistor to increase the amount of current when more responsiveness is required and the load is light.

NOTE

- Since the output terminals are not electrically protected, an output line might be short-circuited or a connection fault might burn the external devices and LT. Be sure to install an applicable fuse for each output terminal if there should be the risk for the current running over the rating.

- LT330*-*1-D24-C Output Circuit (Source type)

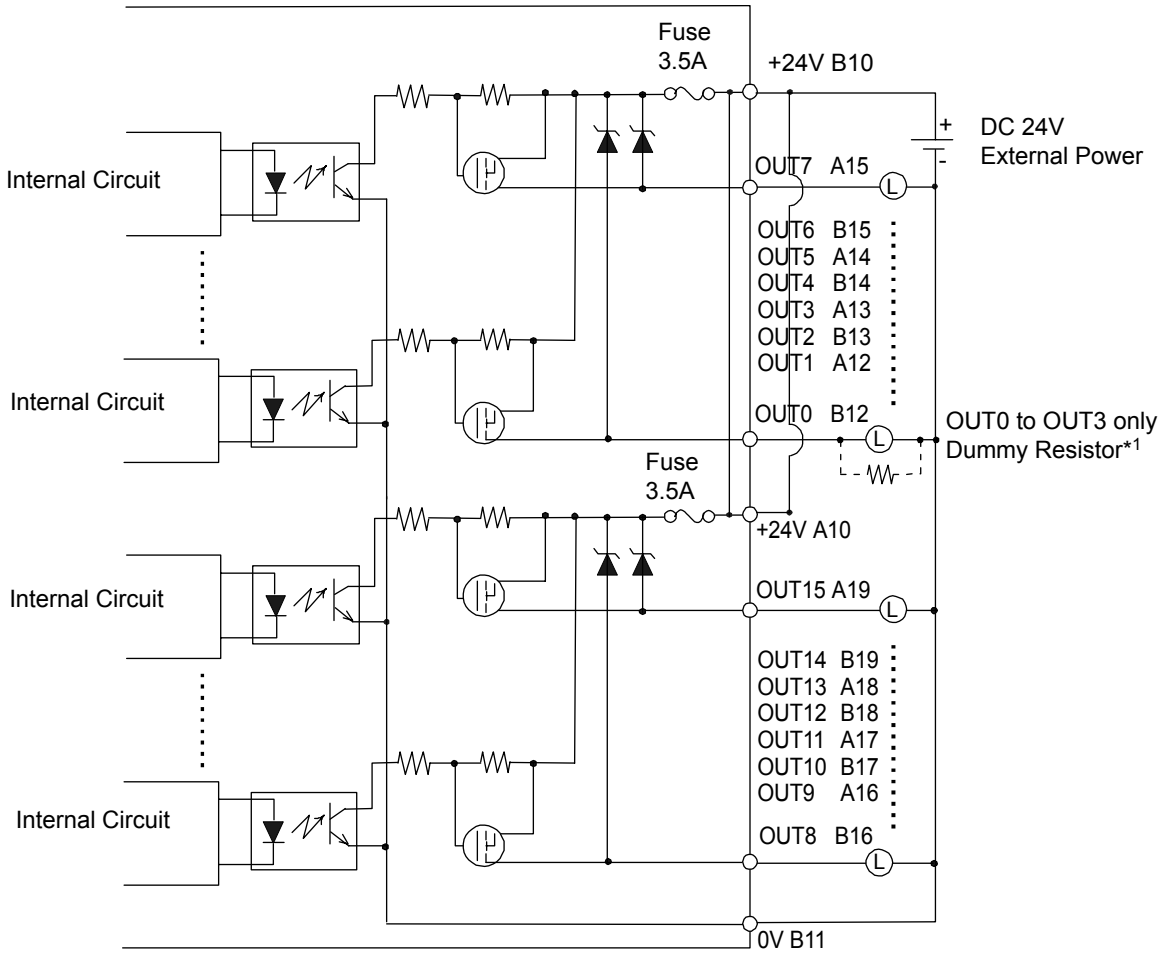

*1 OUT0 to OUT3 only.
(Example) The output delay time (ON to OFF) is 1.5μs where the output current is DC 24V, 50mA. Install an external dummy resistor to increase the amount of current when more responsiveness is required and the load is light.

NOTE

- Since the output terminals are not electrically protected, an output line might be short-circuited or a connection fault might burn the external devices and LT. Be sure to install an applicable fuse for each output terminal if there should be the risk for the current running over the rating.

◆ High-Speed Counter / Pulse Catch Input Specifications

DIO Standard Input/Output is used as a High-Speed Counter Input. The setup is done by the GP-Pro EX.

SEE→ *GP-Pro EX Reference Manual "Controlling External I/O"*

	Counter		Pulse Catch
Input	DC24V Open Collector		DC24V Open Collector
	Single Phase (4 points)	2 Phase (1 point or 2 points)	
Input Points	CT0 (IN0), CT1 (IN2), CT2 (IN4), CT3 (IN6)	CT0 (IN0), CT1 (IN2) (used as pair) CT0: A Phase, CT1: B Phase CT2 (IN4), CT3 (IN6) (used as pair) CT2: A Phase, CT3: B Phase	IN0, IN2, IN4, IN6
Min. Pulse Width (Pulse Input)	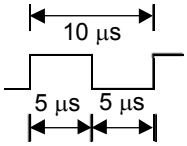		Input signal ON width 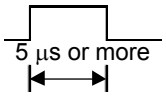
Count Speed (Rise, Fall time)	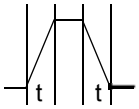 t = 1 μs or less (100kpps)		—
Phase	1 Phase	90 degree phase differential 2-phase signal 1 phase + directional signal	—
High Speed Count Frequency	100Kpps	50Kpps	—
Count Edge Designation	Available	Not Available	—
Count Register	32 Bit UP/DOWN Counter		—
Counter Mode Change	Set through software		—
Upper/Lower Limit Setting	Not Available		—
Preload - Prestrobe	Available		—
Marker Input (Counter Value Clear)	None	IN3, IN7	—

◆ Pulse/PWM Output Specifications

DIO Standard Input/Output is used as a Pulse Output or PWM Output. The setup is done by the GP-Pro EX.

SEE→ *GP-Pro EX Reference Manual "Controlling External I/O"*

	Pulse Output	PWM Output
Output Points	4 Points	
Output Method	PLS0 to PLS3 (OUT0 to OUT3) defined by user	PWM0 to PWM3 (OUT0 to OUT3) defined by user
Load Voltage	DC24V	
Min. Load Current	1mA	
Max. Output Frequency	Up to 65kHz possible per point (set through software)	
Pulse Acceleration/ Deceleration Speed	Available	—
ON Duty	50%±10% (at 65kHz)*1	19 to 81% (at 65kHz)*2

*1 The ON Duty error (10%) will be reduced if the Output frequency is low.

*2 The ON Duty (effective range) will be widened if the Output frequency is low.

2.2.4 Wiring to the DIO Connector

⚠ WARNING

Be sure to remove the DIO Connector from the LT unit prior to starting wiring. Failure to do so may cause an electric shock.

◆ Items Required to Wire Connectors

- Screwdriver

  Recommended type: 1891348-1 <Tyco Electronics AMP.>

  If another manufacturer is used, be sure the part has the following dimensions:

  point depth: 1.5mm [0.06in.]

  point width: 2.4mm [0.09in.]

  Point shape should be DIN5264A, and meet Security Standard DN EN60900.

  Also, the screwdriver's tip should be flat as indicated in order to access the narrow hole of the connector:

Screwdriver Tip Shape

◆ DIO Cable Specifications

DIO Cable Diameter	AWG24 to 18 UL1015 or UL1007
Conductor Type	Stranded Wire*1
Conductor Length	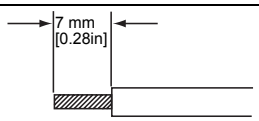

*1 If the Conductor's end (individual) wires are not twisted correctly, the end wires may either short against each other, or against an electrode.

The connectors are a spring clamp type.

◆ Connecting the DIO Cable

1. Insert a flathead screwdriver, at an angle, into the tool insertion hole (square-shaped hole) of the connector.

2. When inserting the flathead screw driver, be sure that it is perpendicular to the center division wall.

NOTE

- Make the insertion distance of the flathead screwdriver approximately 4 mm. Inserting forcefully may break the inside of the connector and will a cause of contact defect. Also, do not turn the flathead screwdriver while the tip is inside of the tool insertion hole (square-shaped hole).

3. The adjacent wire insertion hole (round-shaped hole) will be in an open state.
   With the flathead screwdriver still inserted, insert the wire into the wire insertion hole (round-shaped hole).

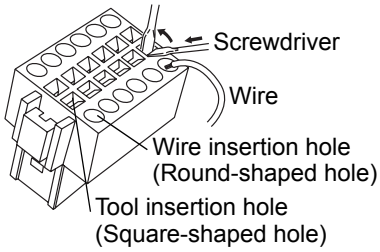

4. Remove the flathead screwdriver from the tool insertion hole (square-shaped hole). The wire insertion hole (round-shaped hole) will close and the wire will be secured. In the case of wire removal, remove the desired wire by inserting a flathead screwdriver into the corresponding tool insertion hole (square-shaped hole) following procedures (1) and (2).

5. Insert the wired DIO connector straight into the DIO I/F of the LT unit.

IMPORTANT

- Be sure to strip only the amount of cover required. If too much cover is removed, the end wires may short against each other, or against an electrode, which can create an electric shock. If not enough cover is removed the wire cannot carry a charge.
- Do not solder the wire itself. This could lead to a bad or poor contact.
- Insert each wire completely into its opening. Failure to do so can lead to a unit malfunction or short, either against wire filaments, or against an electrode.
- When wiring, be aware of the installation position, direction, and twisting of the wiring as to not develop stress on the connector. Fix the cable near the LT by cable clamp and set it loosely as to not place tension on the connector.

2.2.5 Dimensions

The following dimensions apply to LT-3300 series unit.
The dimensions of the LT-3301* are the same. The following drawings show the LT-3300*.

■Installation Fasteners Attached Dimensions

Unit: mm[in.]

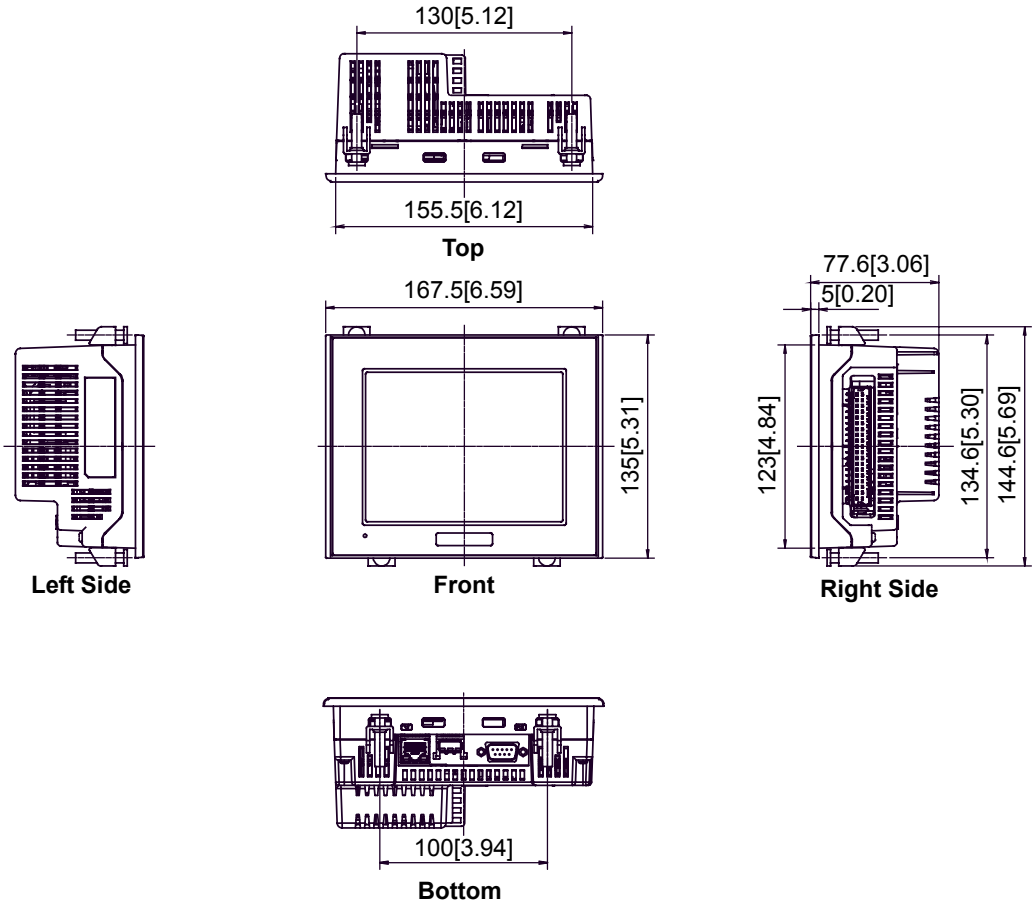

■Cable Attached Dimensions

Unit: mm[in.]

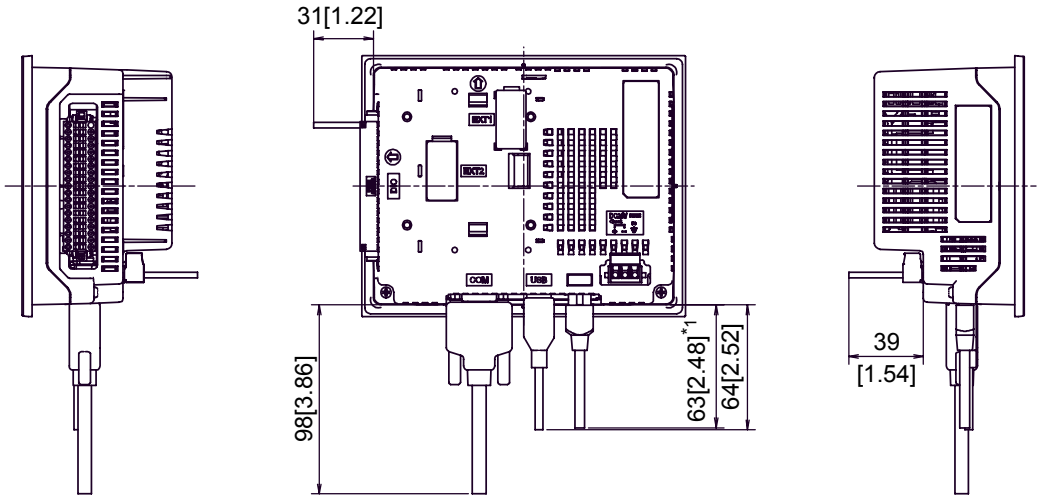

Left Side **Rear** **Right Side**

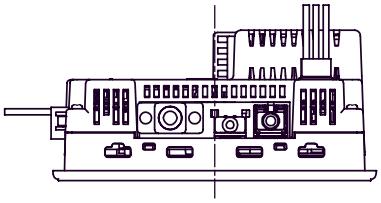

Bottom

*1 The LT-3301L is not equipped with an Ethernet interface.

IMPORTANT

- All the above values are designed in case of cable bending.
  The dimensions given here are representative values depending on the type of connection cable used. Therefore, they are all intended for reference only.

■ Panel Cut Dimensions

Unit: mm[in.]

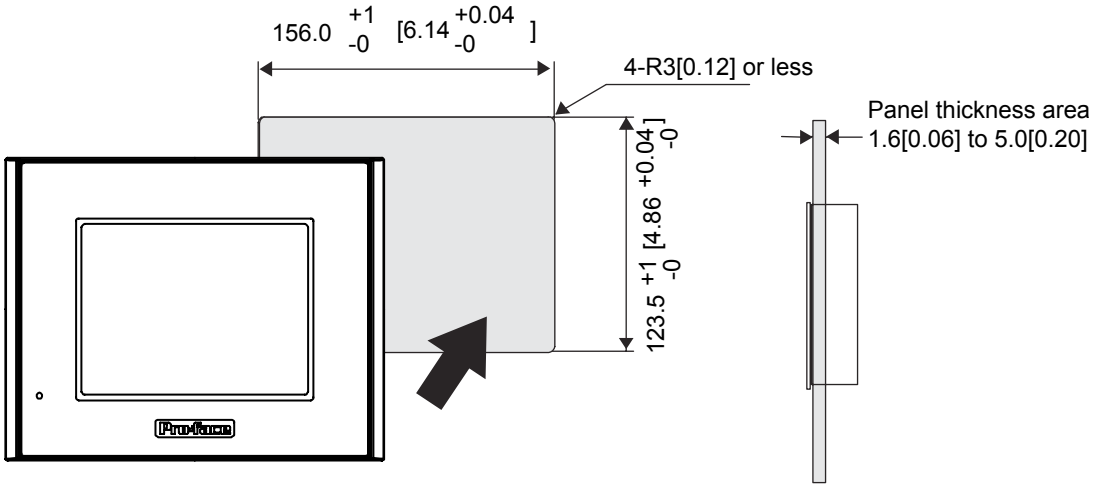

■ Installation Fasteners

Unit: mm[in.]

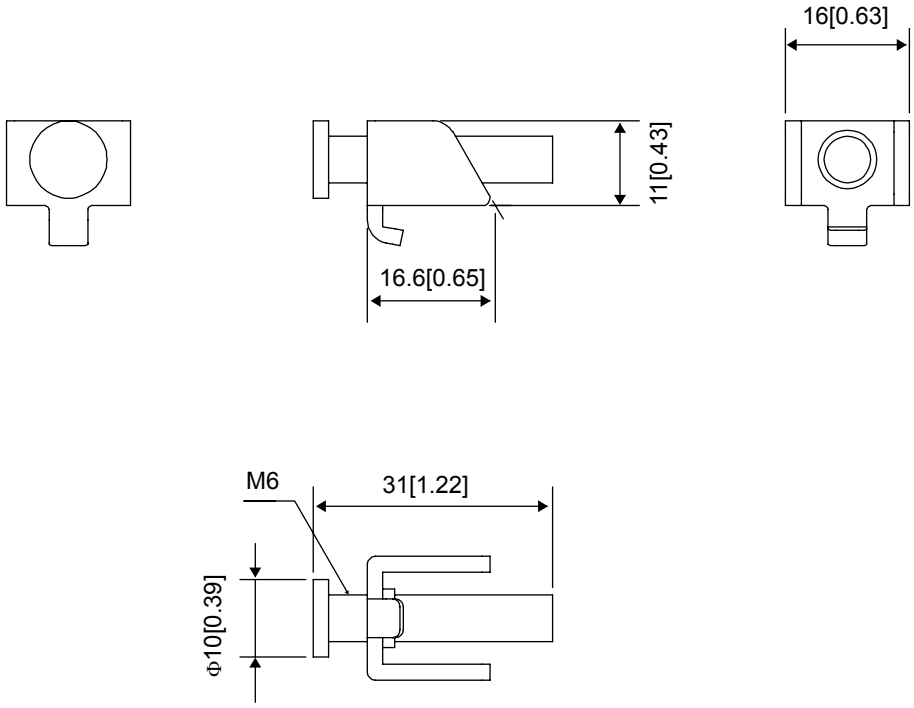

3 Sample of the Circuit Diagrams

1. Examples of Particular I/O Connections

3.1 Examples of Particular I/O Connections

3.1.1 Connection to Pulse Motor Amplifier (CW/CCW type)

The following circuit diagrams show examples of connections between the LT and a pulse motor amplifier (in the case where the transistor can be connected to the amplifier).

NOTE

- The circuit of the pulse motor amplifier is illustrated by the DC24V CW and CCW concept. However, the withstand voltage and the operating current of the coupler, which receives pulse signals, vary by manufacturer. Please contact the amplifier manufacturer before using.

■ Output Sink Type

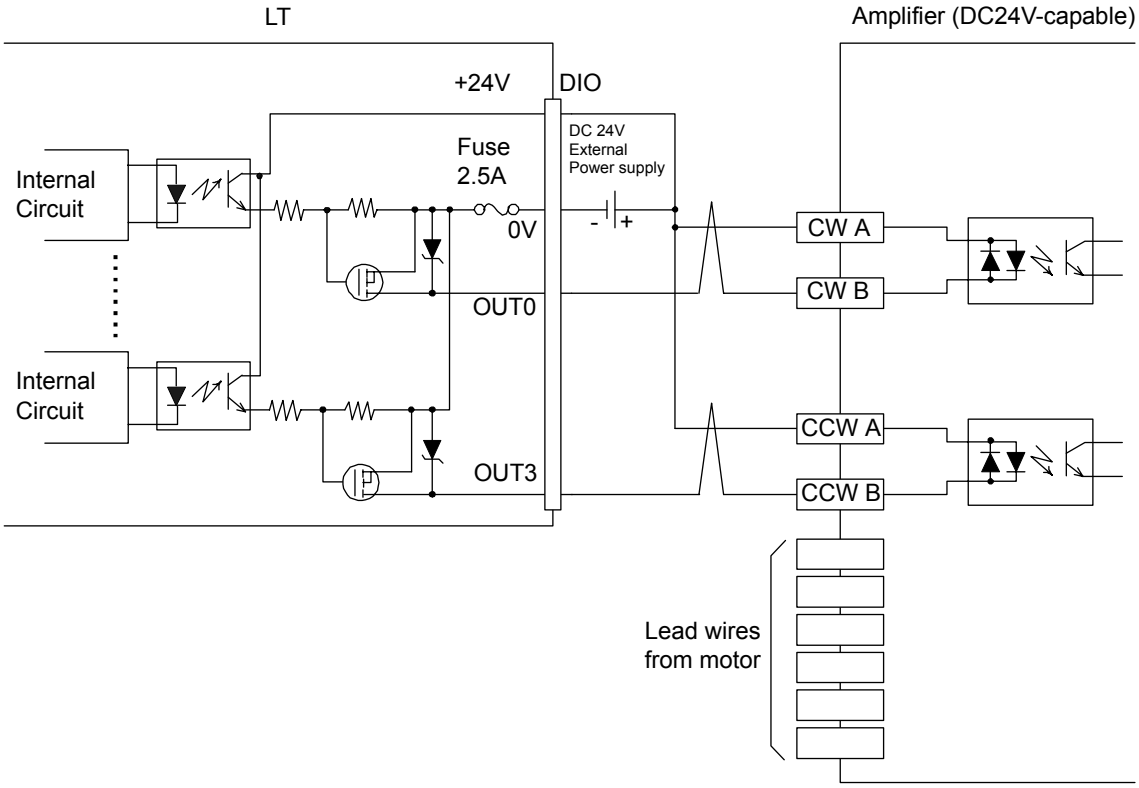

NOTE

- The output terminals for LT pulses are the ones that have the signal names OUT0, OUT1, OUT2, and OUT3. For details of the setting, SEE→ please refer to *the GP-Pro EX Reference Manual*.

■ Output Source Type

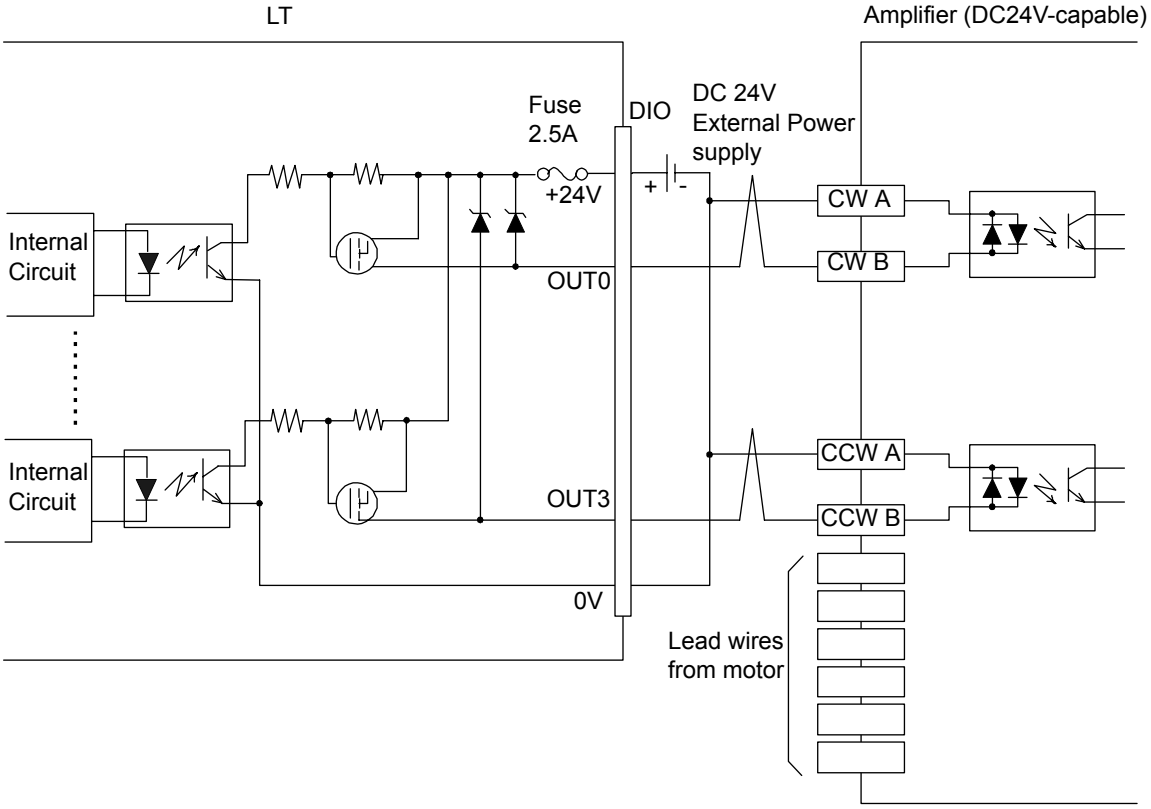

NOTE

- The output terminals for LT pulses are the ones that have the signal names OUT0, OUT1, OUT2, and OUT3. For details of the setting, SEE→ please refer to *the GP-Pro EX Reference Manual*.

3.1.2 Connection to Pulse Motor Amplifier (Clock Up/Down System)

The following circuit diagrams show examples of connections between the LT and a pulse motor amplifier (in the case where the transistor can be connected to the amplifier).

NOTE

- The circuit of the pulse motor amplifier is illustrated by the DC24V clock up/down system. However, the withstand voltage and the operating current of the coupler, which receives pulse signals, vary by manufacturer. Please contact the amplifier manufacturer before using.

■ Output Sink Type

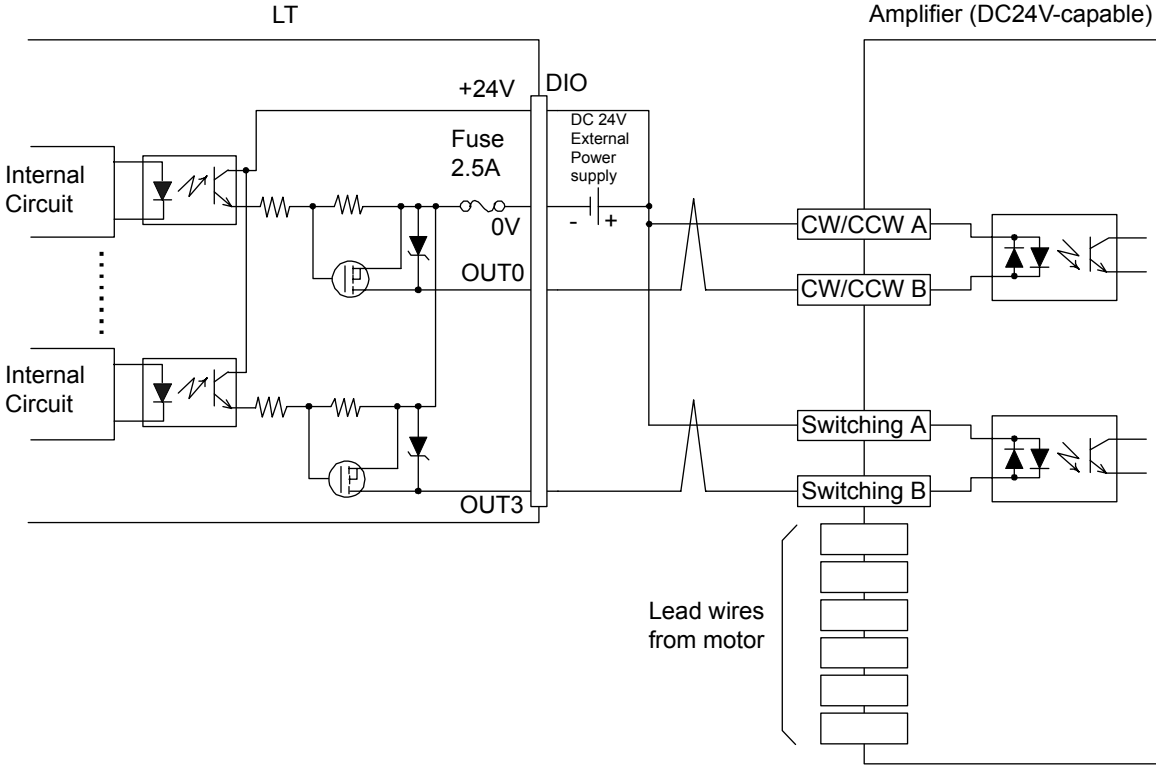

NOTE

- The output terminals for LT pulses are the ones that have the signal names OUT0, OUT1, OUT2, and OUT3. For details of the setting, SEE→ please refer to *the GP-Pro EX Reference Manual*.
- Output signals for switching do not have to be connected to terminals that accommodate high-speed output, and can be connected to general-purpose terminals (LT-3200 series: OUT 4 and OUT5, LT-3300 series: OUT4 through OUT15).

■ Output Source Type

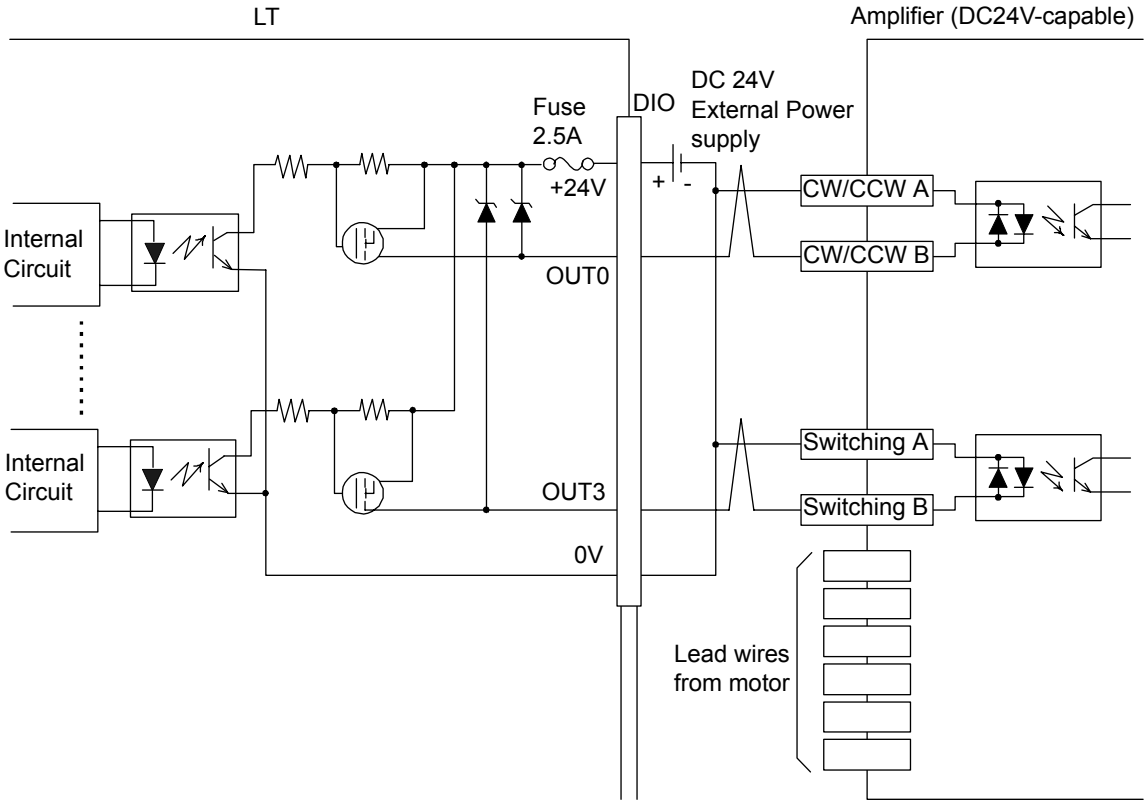

NOTE

- The output terminals for LT pulses are the ones that have the signal names OUT0, OUT1, OUT2, and OUT3. For details of the setting, SEE→ please refer to *the GP-Pro EX Reference Manual*.
- Output signals for switching do not have to be connected to terminals that accommodate high-speed output, and can be connected to general-purpose terminals (LT-3200 series: OUT 4 and OUT5, LT-3300 series: OUT4 through OUT15).

3.1.3 Connection to a Rotary Encoder

The following circuit diagrams show examples of connections between the LT and a rotary encoder (in the case where the transistor can be connected to the rotary encoder).

■ Output Sink Rotary Encoder

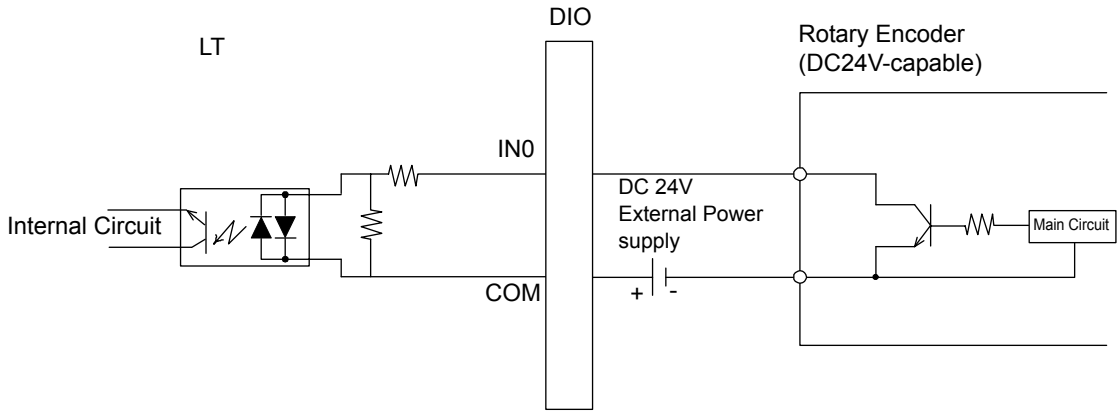

NOTE

- The input terminals for the LT counter are the ones that have the signal names IN0, IN2, IN4, and IN6. For details of the setting, SEE→ please refer to *the GP-Pro EX Reference Manual*.

■ Output Source Rotary Encoder

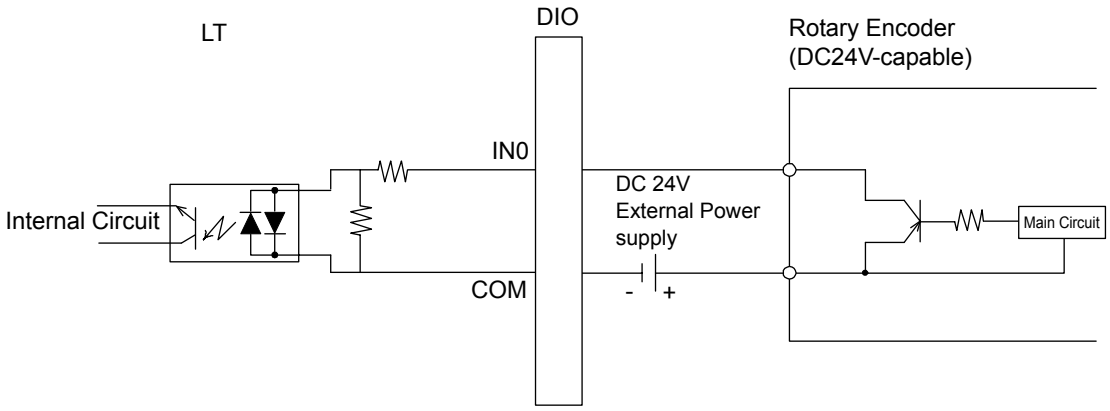

NOTE

- The input terminals for the LT counter are the ones that have the signal names IN0, IN2, IN4, and IN6. For details of the setting, SEE→ please refer to *the GP-Pro EX Reference Manual*.

4 Installation and Wiring

1. Installation
2. Wiring Precautions
3. USB Cable Clamp Attachment/Removal

4.1 Installation

This section describes the procedures and precautions for installing the LT Series units.

■ Check the Installation Gasket's Seating

It is strongly recommended that you use the installation gasket, since it absorbs vibration in addition to repelling water.

For the procedure for attaching the installation gasket, refer to "*5.3 Replacing the Installation Gasket*".

SEE→ *5.3 Replacing the Installation Gasket (page 5-4)*

IMPORTANT

- Before installing the LT into a cabinet or panel, check that the installation gasket is securely attached to the unit.
- A gasket which has been used for a long period of time may have scratches or dirt on it, and could have lost much of its dust and drip resistance. Be sure to change the gasket periodically (or when scratches or dirt become visible).

■ Creating a Panel Cut

Create the correct sized opening required to install the LT, using the installation dimensions given.

Determine the panel thickness according to the panel thickness range with due consideration of panel strength.

SEE→ *LT-3200 Series*
■ *Panel Cut Dimensions (page 2-16)*
LT-3300 Series
■ *Panel Cut Dimensions (page 2-34)*

NOTE

- Check that the installation panel or cabinet's surface is flat, in good condition and has no jagged edges. Also, if desired, metal reinforcing strips can be attached to the inside of the panel, near the Panel Cut, to increase the panel's strength.

■ Installation Requirements

- For easier maintenance, operation, and improved ventilation, be sure to install the LT at least 100 mm [3.94 in.] away from adjacent structures and other equipment.

Unit: mm

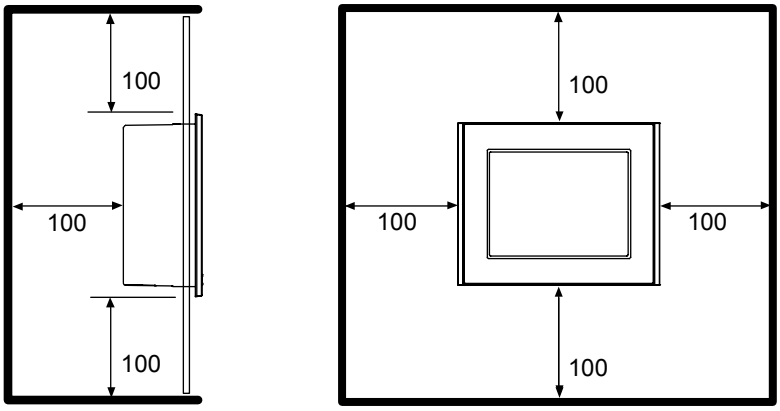

- Be sure that the surrounding air temperature and the ambient humidity are within their designated ranges. (Surrounding air temperature: 0 to 50°C, Ambient humidity: 10 to 90%RH, Wet bulb temperature: 39°C max.) When installing the LT on the panel of a cabinet or enclosure, “Surrounding air temperature” indicates both the panel face and cabinet or enclosure’s internal temperature.

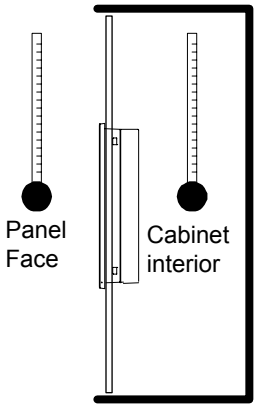

- Be sure that heat from surrounding equipment does not cause the LT to exceed its standard operating temperature.

- When installing the LT in a slanted panel, the panel face should not incline more than 30°.

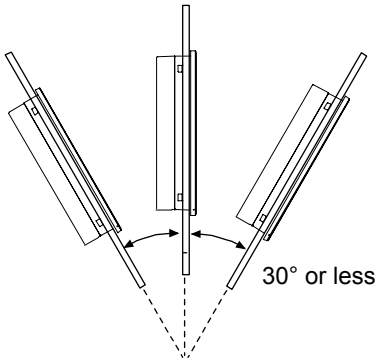

- When installing the LT in a slanted panel, and the panel face inclines more than 30°, the surrounding operating temperature must not exceed 40°C. You may need to use forced air cooling (fan, A/C) to ensure the surrounding operating temperature is 40°C or below.
- The LT-3200 series does not support portrait mounting. When the LT-3300 series is used with the EX module attached to the rear side, it cannot be mounted in portrait orientation.

■ Installing the LT

(1) Insert the LT into the panel cut, as shown.

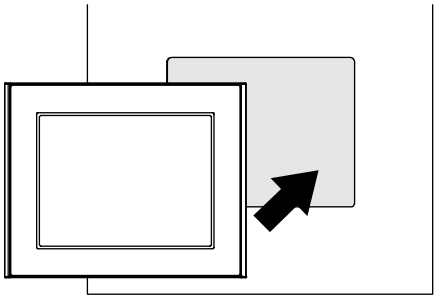

(2) Insert the installation fasteners into the LT insertion slots, at the left and right side or top and bottom side of the unit. (total: 4 slots)

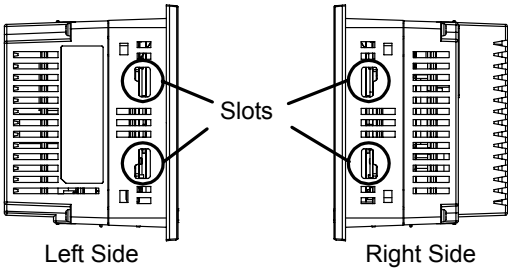

<LT-3200 Series>

IMPORTANT

- Insert each installation fastener securely into the slot's recess (shaded area). If the fasteners are not correctly attached, the LT unit may shift or fall out of the panel.

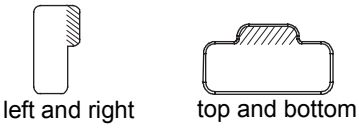

(Example) LT-3200 Series

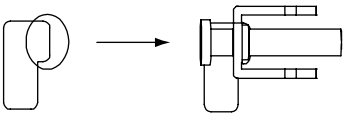

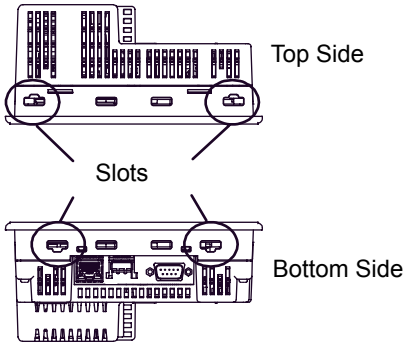

<LT-3300 Series>

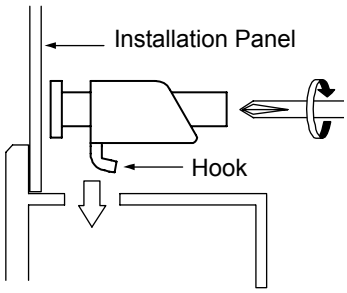

(3) Insert each of the fasteners shown below. Be sure to pull the fastener back until it is flush with the rear of the attachment hole.

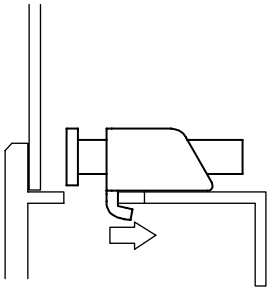

(4) Use a Phillips screwdriver to tighten each fastener screw and secure the LT in place.

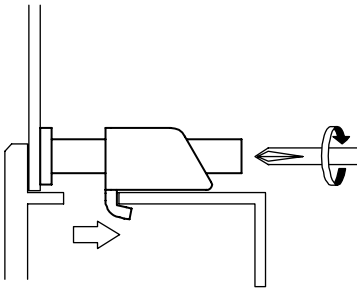

IMPORTANT

- Tightening the screws with too much force can damage the LT unit's plastic case.
- The torque required to tighten these screws is 0.5 N•m.

4.2 Wiring Precautions

This section describes the procedures and precautions for wiring power cords.

4.2.1 Connecting the Power Cord

⚠ WARNING

- To avoid an electric shock, prior to connecting the LT unit's power cord terminals to the power terminal block, confirm that the LT unit's power supply is completely turned OFF, via a breaker, or similar unit.
- Supplying a power voltage other than that specified will damage the power source and the LT unit.
- Since there is no power switch on the LT unit, be sure to attach a breaker-type switch to its power cord.
- When the FG terminal is connected, be sure the wire is grounded.

IMPORTANT

- When the FG terminal is connected, be sure the wire is grounded. Not grounding the LT unit will result in excess noise and vibration.
- The SG and FG terminals are connected internally in the LT unit.
  When connecting the SG wire to another device, be sure that the design of the system/connection does not produce a shorting loop.

■ When the DC Type

Power Cord Specifications

Power Cord Diameter	0.75 to 2.5mm^2 (18-12AWG)
Conductor Type	Simple or Twisted Wire
Conductor Length	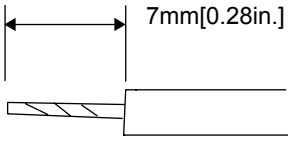

IMPORTANT

- Use copper conductors only.
- If the Conductor's end (individual) wires are not twisted correctly, the end wires may either short against each other, or against an electrode.

Power Connector (Plug) Specifications

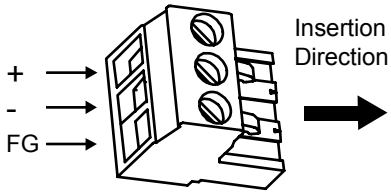	+	24V
	-	0V
	FG	FG Grounding Terminal connected to the LT

NOTE

- The power supply connector (plug) is CA5-DCCNM-01 (made by Pro-face) or MSTB2,5/3-ST-5,08 (made by Phoenix Contact*1).

*1 For details, please contact your local Phoenix Contact distributor.

Wiring

When connecting the Power Cord, use the following items when performing wiring. (Items are made by Phoenix Contact.)

Recommended Driver	SZF 1-0.6x3.5 (1204517)
Recommended Pin Terminals	AI 0.75-8GY (3200519) AI 1-8RD (3200030) AI 1.5-8BK (3200043) AI 2.5-8BU (3200522)
Recommended Pin Terminal Crimp Tool	CRIMPFOX ZA3 (1201882)

Connecting the Power Cord

IMPORTANT

- Be sure to remove the connector from the LT unit prior to starting wiring. Failure to do so may cause an electric shock.
- The temperature rating of field installed conductors: 75°C only.

(1) Confirm that the power cord is unplugged from the power supply.

(2) Strip the membrane of the power cord, twist the wire ends, and connect them to the Power Connector (Plug).

IMPORTANT

- Use a flat-blade screwdriver (Size 0.6 X 3.5) to tighten the terminal screws. The torque required to tighten these screws is 0.5 to 0.6N•m [5-7lb•in].
- Do not solder the cable connection.

(3) Reattach the Power Connector (Plug).

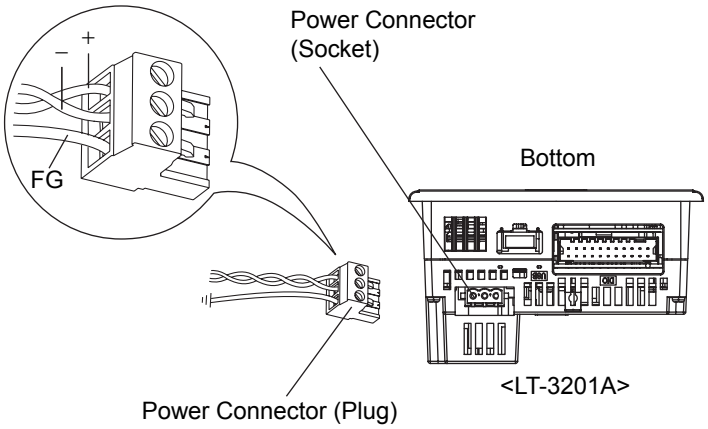

NOTE

- Be sure to twist the power cords together, up to the power connector.

4.2.2 Connecting the Power Supply

This section describes the precautions for supplying a power voltage.

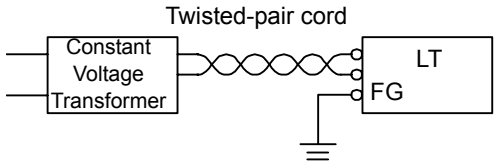

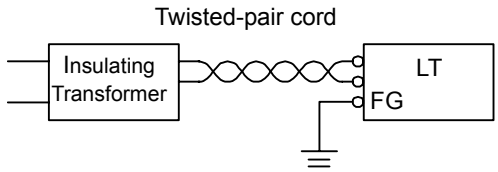

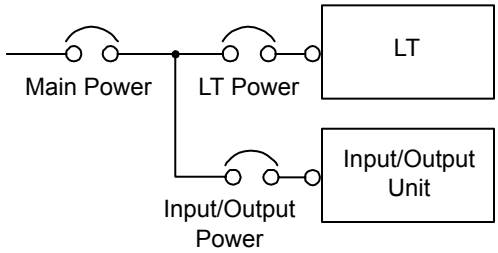

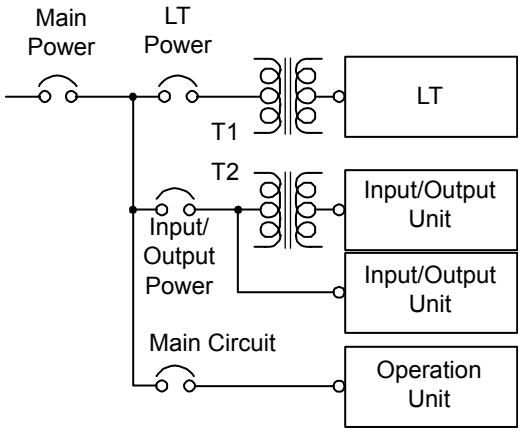

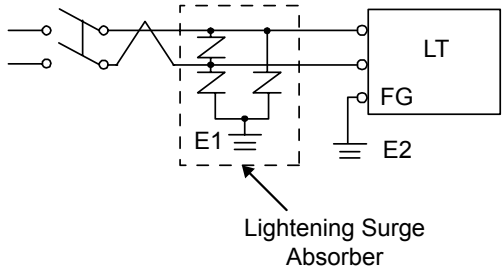

- If the supplied voltage exceeds the LT unit's range, connect a constant voltage transformer.

SEE→ *Chapter 2 Specifications (page 2-1)*

- For between the line and ground, select a power supply that is low in noise. If there is an excess amount of noise, connect a insulating transformer.

IMPORTANT
- Use constant voltage and insulating transformers with capacities exceeding Power Consumption value.

- When supplying power to the LT unit, be sure to separate the input/output and power lines, as shown.
- To increase the noise resistance quality of the power cord, simply twist each power wire before attaching the Ring Terminal.
- The power supply cable must not be bundled or positioned close to main circuit lines (high voltage, high current), or input/output signal lines.
- Connect a lightening surge absorber, as shown in the diagram, to deal with power surges.
- To avoid excess noise, make the power cord as short as possible.
- 24V DC input unit is must be used with a Class 2 power supply.

IMPORTANT
- Be sure to ground the surge absorber (E1) separately from the LT unit (E2).
- Select a surge absorber that has a maximum circuit voltage greater than that of the peak voltage of the power supply.

4.2.3 Grounding

This section describes the precautions for grounding the LT unit.

⚠ CAUTION

Do not use common grounding, since it can lead to an accident or machine breakdown.

(a) Exclusive Grounding (BEST)

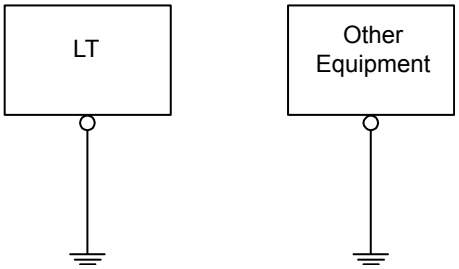

(b) Exclusive Grounding (OK)

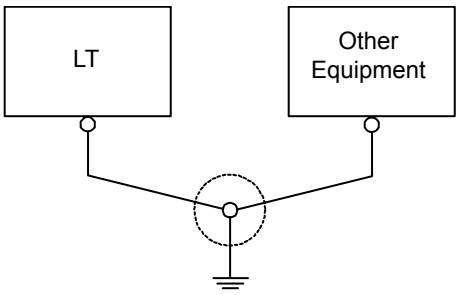

(C) Common Grounding (Not OK)

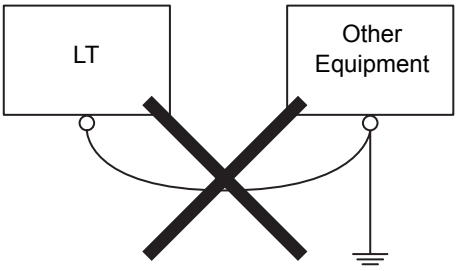

- When supplying power to the LT unit, be sure to separate the input/output and power lines, as shown. [diagram (a)]

IMPORTANT

- Check that the grounding resistance is 100Ω or less.
- FG and SG terminals are internally connected in the LT. When connecting an external device to the LT using the SG terminal, be sure to check that no short-circuit loop is created when you setup the system.
- The grounding wire should have a cross sectional area greater than $2mm^2$ Create the grounding point as close to the LT unit as possible, and make the wire as short, as possible. When using a long grounding wire, replace the thin wire with a thicker wire, and place it in a duct.

- If exclusive grounding is not possible, use a common grounding point. [diagram (b)] A grounding or equivalent should be used for the grounding point.

NOTE

- If the equipment does not function properly when grounded, disconnect the ground wire from the FG terminal.

4.2.4 Wiring Precautions

To help prevent noise and interference problems, separate all control, communication and power lines by placing them in a separate ducts.

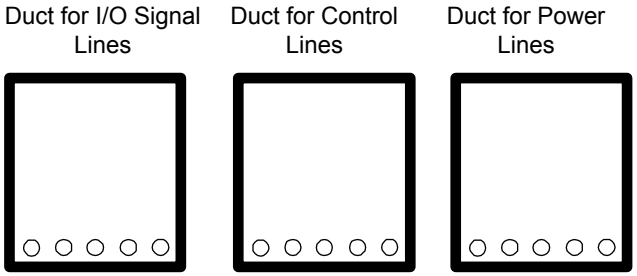

If different wires must be placed in the same duct, separate them with an earthed/grounded divider.

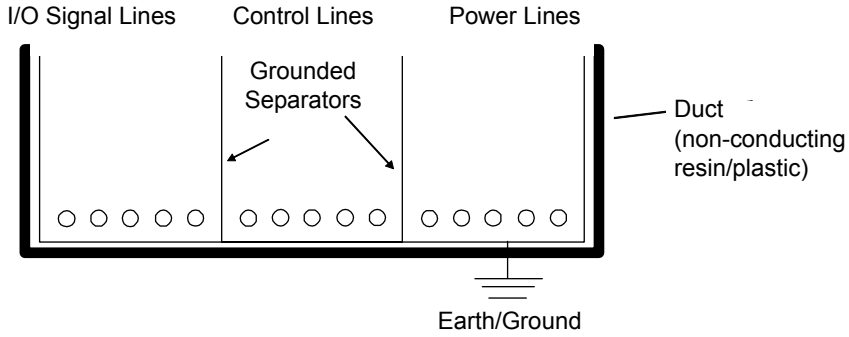

NOTE

- If the lines cannot be separated, use shielded lines and create a ground from the shield line.

IMPORTANT

- Use noise-reducing external wiring methods to increase overall system reliability.
- To prevent power surges or noise interference, use ducts to separate all DC I/O or current circuit wires from communication cables.
- To prevent malfunctions due to noise, communication cables must be wired separately from high-frequency lines and power lines such as high-voltage lines, high-current lines, and inverters.

4.2.5 Installation Precautions

External power failure or failure of the LT unit may cause abnormal behavior.
To prevent such abnormal behavior from leading to the abnormal operation of the entire system, and to ensure fail-safe operation, configure circuits which may lead to machine damage or accident due to abnormal operation (emergency stop circuit, protection circuit, interlock circuit, etc.) externally to the LT.
This section describes examples of the system circuit design to improve system reliability and to ensure optimum performance.

■ Fail-safe Design of the Electric Circuit

Design the electric circuit with consideration to equipment malfunctions caused when the LT is turned on by a delay among the startup times of the control equipment connected to the LT output unit (especially the one operated by a DC power supply), the LT unit itself, and the program. When remote I/O is used, create a program that checks the status of the terminal with a logic program.
For example, connect voltage relay coils to the power supply circuit of the LT output unit and the power supply circuit of the connected control equipment, and connect the contact to the LT input unit. Configure the circuit to check the ON signal from the voltage relay in the logic program before executing the ladder of the control equipment connected to the LT output unit.

■ Rated Voltage

Be sure to supply an appropriate power supply voltage to your LT that is within the specified range.

■ Power-down

LT unit enters power-down status when an instantaneous power interruption of the rated voltage continues for 10ms or longer.
When the LT unit enters power-down status, it stops the calculation even if the instruction is not finished.
For example, when the LT unit enters power-down status while 100 words of data are being transferred by an FMOV instruction, the transfer stops midway.
Consequently, design your program with consideration to power-down occurrences.

■ Emergency Stop Circuit

Do not process emergency stop signals with a software program by inputting the signal to the LT.

Configure the emergency stop circuit externally to the LT as shown in the figure below:

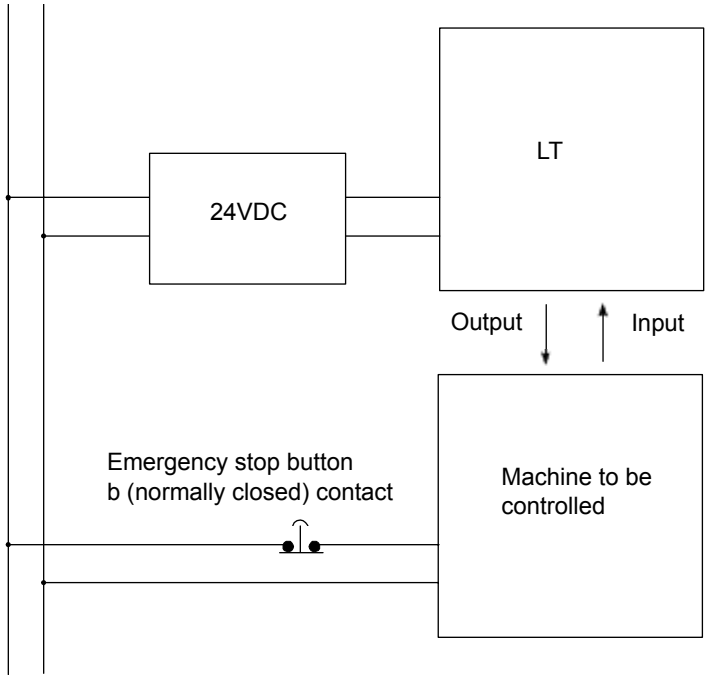

■ Interlock Circuit 1

To use the LT or a PLC to control a motor circuit for forward/reverse rotation, configure the interlock circuit shown below externally to the LT.

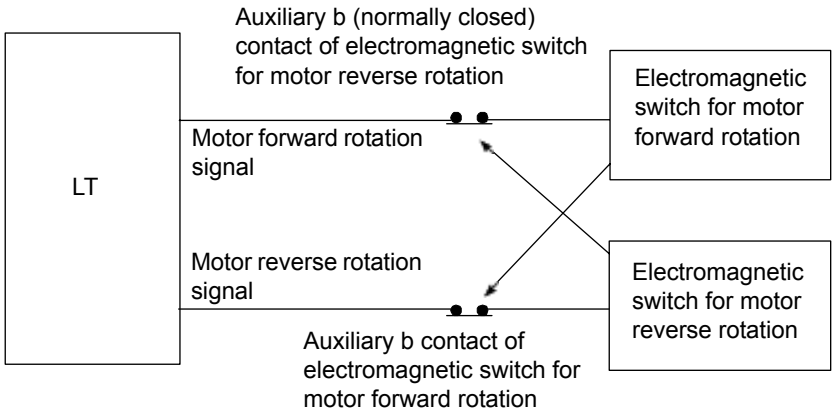

NOTE

- After executing an internal program, the LT outputs ON/OFF information to the output devices at the same time. For example, the electromagnetic switches for forward and reverse rotation of a motor are turned on and off at the same time.
  Consequently, a situation may arise in which both of the main contacts of the motor circuits for the electromagnetic switches for forward and reverse rotation may turn on, causing a short-circuit of the R and T phases. To avoid this situation, you need to provide the interlock circuit shown above or use an electromagnetic switch equipped with a mechanical interlock for a forward/reverse circuit.

■ Interlock Circuit 2

If there is a possibility that the abnormal operation of the LT may lead to an accident, design a fail-safe measure to configure an interlock circuit with external hardware devices.
For a system which requires the running motor to stop before all other processes when the travel limit switch is activated, never design a system in which the signals from the travel limit switch are input to the input terminals of the LT and then processed using software.
Configure a circuit that reliably stops the running motor using hardware as shown below.

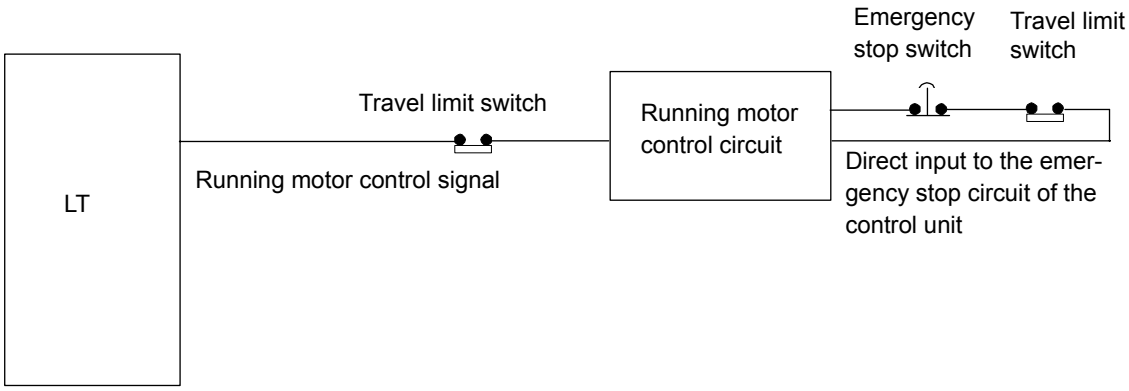

4.3 USB Cable Clamp Attachment/Removal

This clamp is used to prevent the USB cable connected to the USB Host Interface on the bottom of the LT unit from being unplugged due to vibration or other causes.

IMPORTANT

- When the USB Host Interface is used in the hazardous locations specified in ANSI/ISA-12.12.01, use the USB holder to secure the USB cable. The USB Host Interface cannot be used unless the connectors attached to the LT unit and connected device are completely secured to prevent disconnection.

4.3.1 LT-3200 Series

■ Attachment

(1) Before starting the procedure, orient the two tabs on both sides of the USB Holder in the direction of the arrows in the figure and remove the USB Cover.

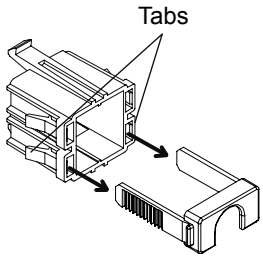

(2) With the main unit display part positioned so that it is facing down, attach the USB holder to the USB host interface. Do this by inserting the picks on the USB holder itself into the attachment holes on the main unit. Insert the upper hook first.

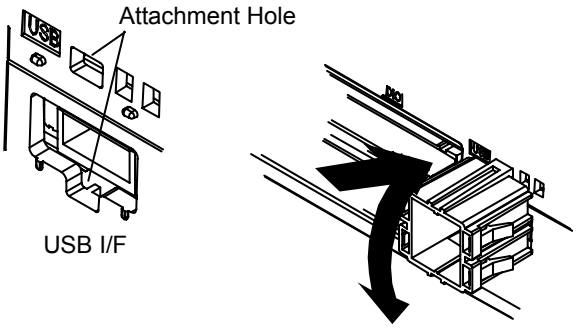

(3) Insert the USB cable into the USB Host Interface.

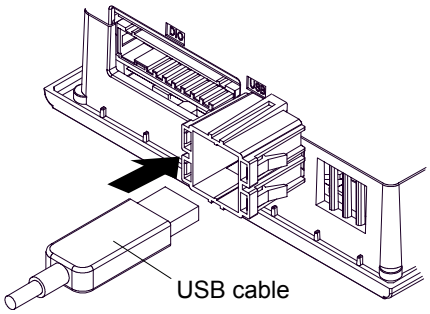

(4) Attach the USB cover to the USB host interface. Insert the USB cover into the tab of the USB holder.

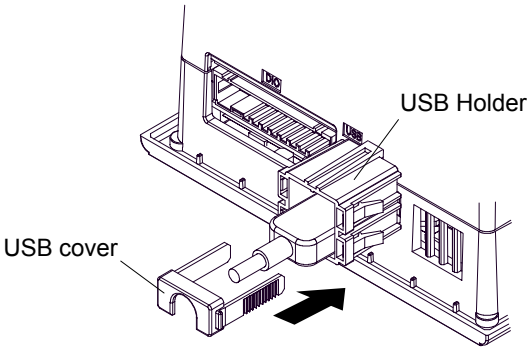

IMPORTANT

- Insert the USB cover in the orientation shown in the illustration above.

4.3.2 LT-3300 Series

■ Attachment

(1) Before starting the procedure, pull out the USB cover from the USB holder by holding the top and bottom of the USB holder and pressing down the tab on the USB cover.

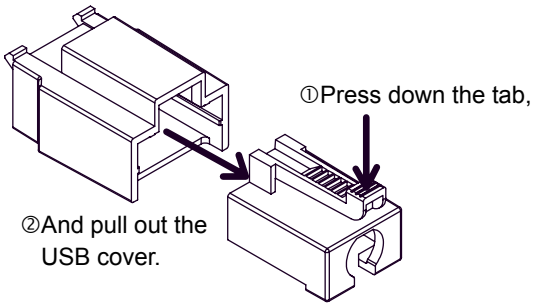

(2) With the main unit display part positioned so that it is facing down, attach the USB holder to the USB host interface. Insert the picks on the top of the USB holder into the attachment holes on the main unit, and then insert the holder into the USB host interface so that the holder is secured in the main unit.

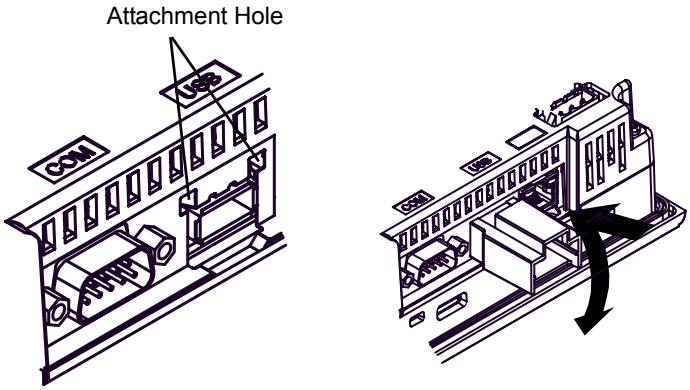

(3) Insert the USB cable into the USB Host Interface.

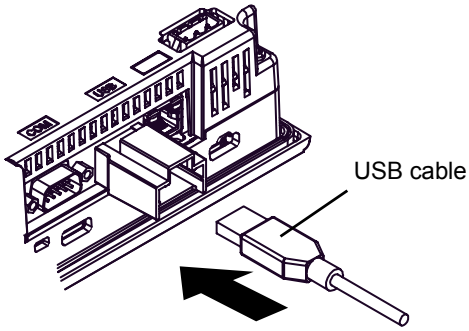

(4) Attach the USB cover to the USB host interface. Hold the USB cover in the orientation shown in the figure and insert it into the USB holder.

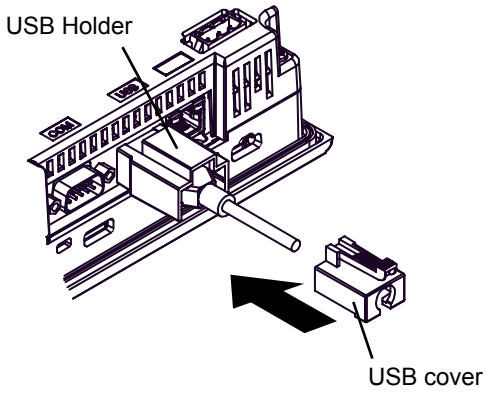

■ Removal

(1) Pull out the USB cover from the USB holder by pressing down the tab on the USB cover.

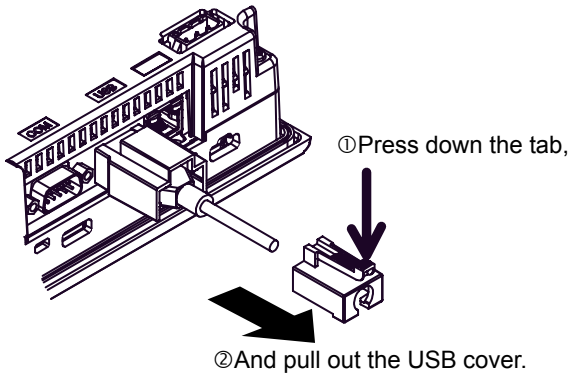

(2) Insert the tip of a flat-blade screwdriver into the hole on the bottom of the USB holder and raise the handle so that the USB holder detaches from the USB host interface.

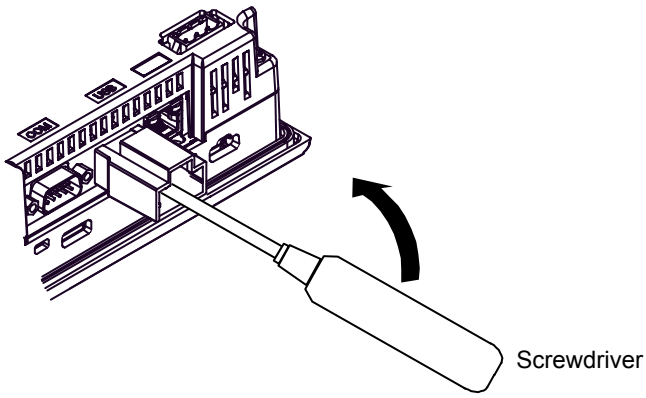

5 Maintenance

1. Cleaning the Display
2. Periodic Check Points
3. Replacing the Installation Gasket
4. Replacing the Backlight

This chapter explains cautions and inspection criteria that will ensure trouble-free use of the LT.

5.1 Cleaning the Display

When the surface or frame of the display become dirty, soak a soft cloth in water with a neutral detergent, wring the cloth tightly, and wipe the display.

IMPORTANT

- Do not use paint thinner, organic solvents, or a strong acid compound to clean the unit.
- Do not use hard or pointed objects to operate the touch-screen panel, since it can damage the panel surface.

5.2 Periodic Check Points

To keep your LT unit in its best condition, please inspect the following points periodically.

■ LT Operation Environment

☐ Is the operating temperature within the allowable range (0ºC to 50ºC)?

☐ Is the operating humidity within the specified range (10%RH to 90%RH, dry bulb temperature of 39ºC or less)?

☐ Is the operating atmosphere free of corrosive gasses?

When using the LT unit inside a panel, the ambient environment refers to the interior of the panel.

■ Electrical Specifications

☐ Is the input voltage appropriate?

DC19.2 to 28.8V

■ Related Items

☐ Are all power cords and cables connected properly? Have any become loose?

☐ Are all mounting brackets holding the unit securely?

☐ Are there many scratches or traces of dirt on the installation gasket?

5.3 Replacing the Installation Gasket

The installation gasket provides protection against dust and moisture.

IMPORTANT

- A gasket which has been used for a long period of time may have scratches or dirt on it, and could have lost much of its water resistance. Be sure to change the gasket at least once a year, or when scratches or dirt become visible.
- The LT unit installation gasket's model number is as follows.

LT-3200 Series	ST400-WP01
LT-3300 Series	CA3-WPG6-01

■ Installation Gasket Attachment Procedure

(1) Place the LT on a flat, level surface facing the display face downwards.

(2) Remove the gasket from the LT.

(3) Attach the new gasket to the LT. Be sure to insert the gasket into the LT's groove so that the gasket's groove sides are vertical.

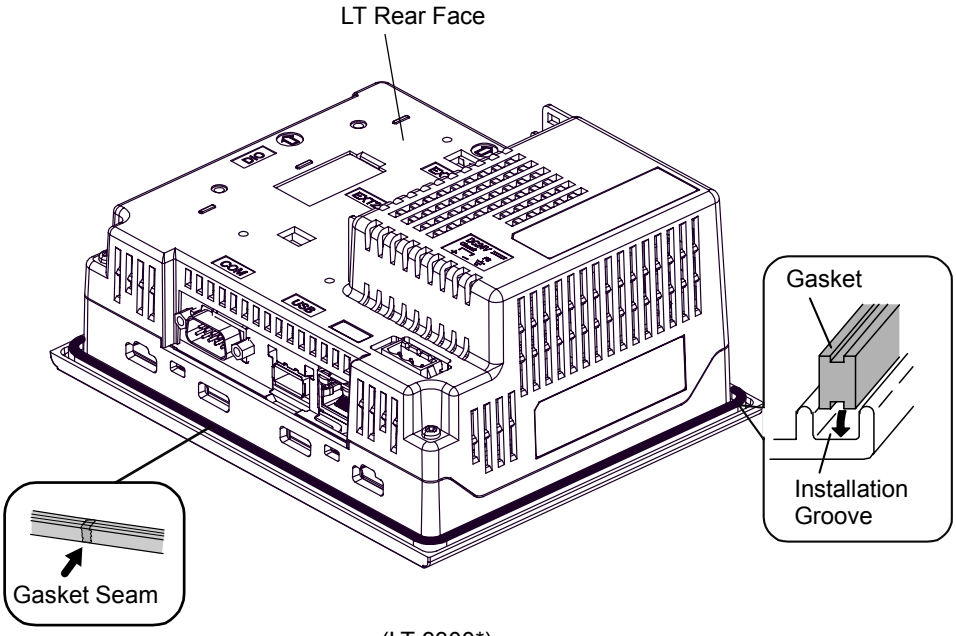

(LT-3300*)

(4) Check that the gasket is attached correctly to the LT.

IMPORTANT

- The gasket must be inserted correctly into the groove for the LT's moisture resistance to be equivalent to IP65f.
- Since the gasket is flexible but not elastic, be careful not to stretch it unnecessarily, as doing so could tear the gasket.
- Be sure the gasket's seam is not inserted into any of the unit's corners, only in the straight sections of the groove. Inserting it into a corner may lead to its eventually tearing.
- To ensure stable resistance against dust and moisture, insert the gasket so that the seam is at the bottom of the LT unit.
- The upper surface of the gasket should protrude approximately 2.0 mm out from the groove. Be sure to check that the gasket is correctly inserted before installing the LT into a panel.

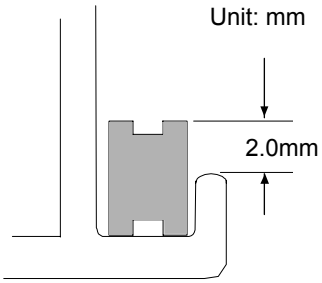

5.4 Replacing the Backlight

IMPORTANT

- The LT's backlight cannot be replaced by the user. When the backlight needs to be replaced, please contact your local LT distributor.